Luxury Property Specialists - Sonoma County Top 1%

Doug Swanson | Mary Haufler
707-291-4400 Doug | 707-328-3868 Mary

doug@srealproperty.com
maryhaufler@gmail.com

Doug CalBRE License # 01297381
Mary CalBRE License # 01471644

121 Mary Paige Ln, Santa Rosa, CA 95404-8549, Sonoma County

2	N/A	1,821,679	N/A
Beds	Bldg Sq Ft	Lot Sq Ft	Sale Price
2	1997	VINEYARD	N/A
Baths	Yr Built	Type	Sale Date

Owner Information

Owner Name:	**Phillips David V**	Tax Billing Zip:	**95404**
Owner Name 2:	**Phillips Dale A**	Tax Billing Zip+4:	**8549**
Tax Billing Address:	**121 Mary Paige Ln**	Owner Occupied:	**Yes**
Tax Billing City & State:	**Santa Rosa, CA**		

Location Information

Census Tract:	**1505.00**	Carrier Route:	**R045**

Tax Information

Tax ID:	**049-020-029**	% Improved:	**70%**
Tax Area:	**153000**	Lot:	**4**

Assessment & Tax

Assessment Year	2017	2016	2015
Assessed Value - Total	$647,488	$595,752	$588,193
Assessed Value - Land	$197,203	$215,938	$213,677
Assessed Value - Improved	$450,285	$379,814	$374,516
YOY Assessed Change ($)	$51,736	$7,559	
YOY Assessed Change (%)	8.68%	1.29%	

Tax Year	Total Tax	Change ($)	Change (%)
2015	$6,838		
2016	$7,045	$207	3.03%
2017	$7,569	$524	7.43%

Special Assessment	Tax Amount
Ws Dam-Russian River Pros	$44.84
Bennett Valley Elem Bond	$115.28
Bennett Valley Elem 2010 Bonds	$172.94
Santa Rosa High Bond	$153.72
Santa Rosa High Bond 2002	$96.08
Santa Rosa High 2014 Bond	$128.10
So Co Junior College Bond	$89.66
Soco Jr College 2014 Bond	$147.32
Bennett Valley Fire	$180.00
Ms-Sonoma Mosquito #1	$24.00
Sf Bay Area Restoration	$12.00
Total Of Special Assessments	$1,163.94

Characteristics

Approx Lot SqFt:	**1,821,679**	Bedrooms:	**2**
Lot Acres:	**41.82**	Total Baths:	**2**
Land Use - County:	**Vineyard-Irr W/Res**	Full Baths:	**2**
Stories:	**1**	Total Rooms:	**9**
Style:	**U-Shape**	Fireplaces:	**1**

Courtesy of Doug Swanson, Bay Area Real Estate Services

The data within this report is compiled by CoreLogic from public and private sources. The data is deemed reliable, but is not guaranteed. The accuracy of the data contained herein can be independently verified by the recipient of this report with the applicable county or municipality.

Property Detail

Year Built:	**1997**	Construction:	**Wood Frame/Cb**
Effective Year Built:	**1998**	Quality:	**Good**
Garage Type:	**Attached Garage**	Assessor's Building Quality:	**7.0**
Garage Sq Ft:	**936**	Land Use - Universal:	**Vineyard**

Last Market Sale & Sales History

Recording Date:	**11/19/1996**	Document Number:	**103735**
Owner Name:	**Phillips David V**	Deed Type:	**Grant Deed**
Owner Name 2:	**Phillips Dale A**		

Recording Date	09/18/2006	11/19/1996
Nominal	Y	
Buyer Name	Phillips David V & D A Trust	Phillips David V & Dale A
Seller Name	Phillips David V & Dale A	
Document Number	114743	103735
Document Type	Quit Claim Deed	Grant Deed

Mortgage History

Mortgage Date	03/16/2016	07/30/2013	06/26/2013	11/30/2010	09/30/2009
Mortgage Amt	$406,500	$50,000	$600,000	$573,500	$100,000
Mortgage Lender	American Agcredit Pca	Redwood Cu	Redwood Cu	Redwood Cu	Redwood Cu
Mortgage Type	Conventional	Conventional	Conventional	Conventional	Conventional
Borrower Name	Phillips David V & Dale A Trus	Phillips David V & D A Trust	Phillips David V & D A Trust	Phillips David V & D A Trust	Phillips David V & Dale A

Mortgage Date	09/30/2009	02/08/2006	04/26/2005
Mortgage Amt	$585,000		$130,000
Mortgage Lender	Redwood Cu	Private Individual	Redwood Cu
Mortgage Type	Conventional	Private Party Lender	Conventional
Borrower Name	Phillips David V	Phillips David V	Phillips David V

Property Map

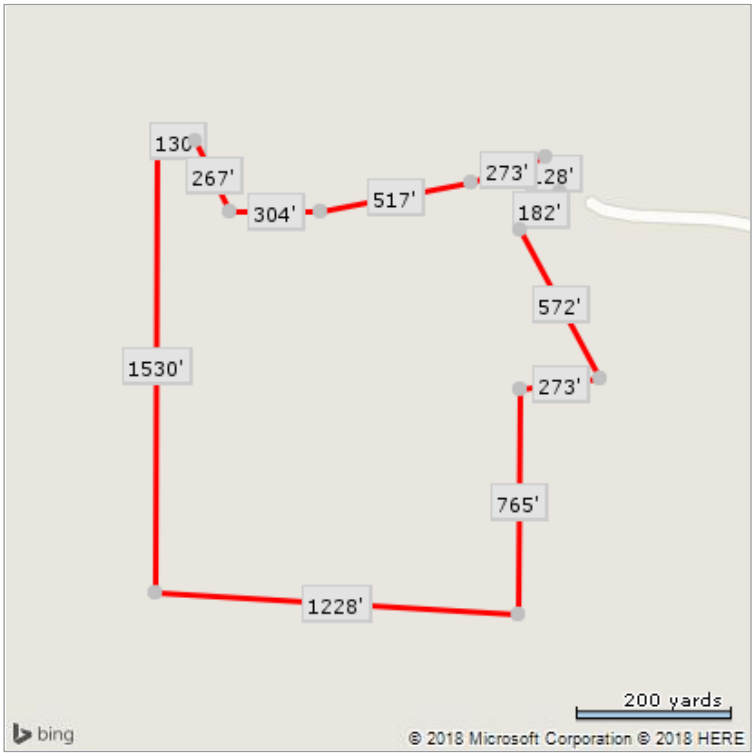

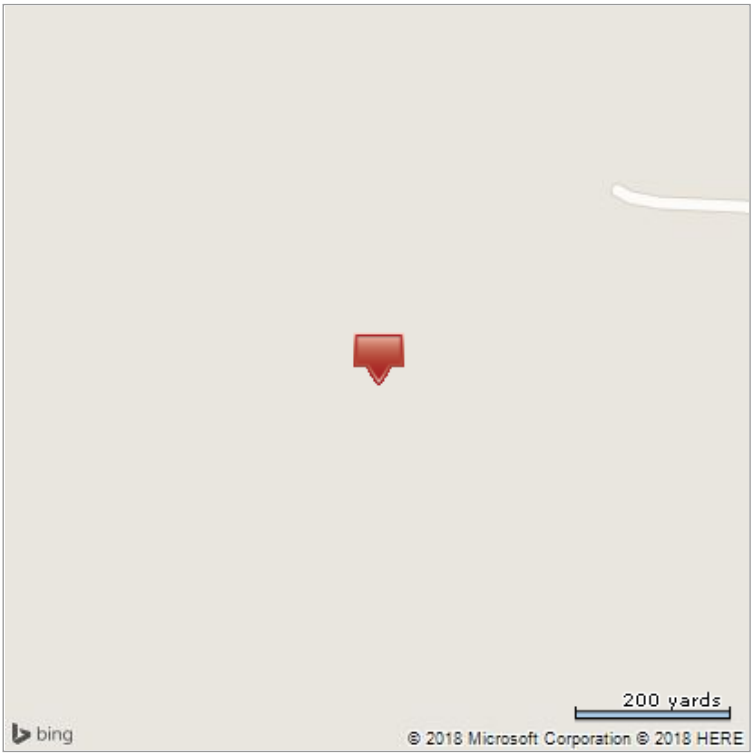

*Lot Dimensions are Estimated

The data within this report is compiled by CoreLogic from public and private sources. The data is deemed reliable, but is not guaranteed. The accuracy of the data contained herein can be independently verified by the recipient of this report with the applicable county or municipality.

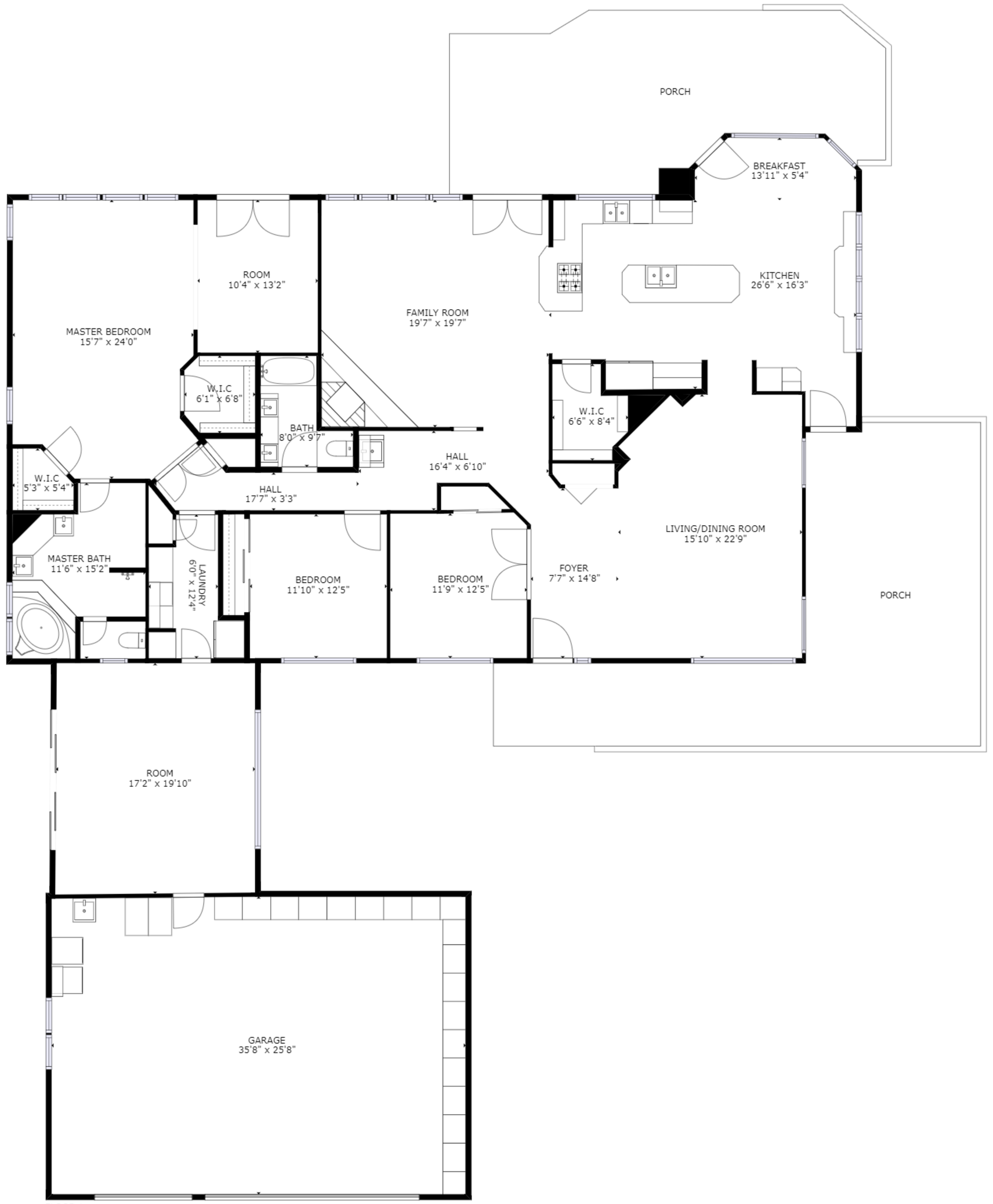

GROSS INTERNAL AREA
FLOOR 1: 3192 sq ft, EXCLUDED AREAS:
PORCH: 1104 sq ft, GARAGE: 914 sq ft
TOTAL: 3192 sq ft

SIZES AND DIMENSIONS ARE APPROXIMATE, ACTUAL MAY VARY.

POWERED BY matterport®

Sonoma County Permit and Resource Management Department

Website: www.sonomacountypermits.org

Address: 2550 Ventura Avenue
Santa Rosa, CA 95403-2829

Phone: (707) 565-1900

Fax: (707) 565-1103

Permit History Lookup

This service provides convenient access to permit history information. All reasonable effort has been made to ensure the accuracy of the data provided. However, the data may be out of date or inaccurate. The County of Sonoma assumes no responsibility arising from the use of this information. This information and associated data are provided without warranty of any kind, either expressed or implied, including but not limited to, the implied warranties of merchantability and fitness for a particular purpose. Do not make any business decisions based on this data before validating the data with the Sonoma County Permit and Resource Management Department.

Permit History By Address

Address: **121 Mary Paige Ln**

PRMD Area: **Santa Rosa**

Permits: **1**

Permit History as of February 05, 2018

Number	Date	Status	Type	Description
LLA17-0072	12/20/2017	Paid	Lot Line Adjustment	Request for a Lot Line Adjustment between three parcels, 40.09 acres, 40.02 acres, and 41.82 acres in size, resulting in three parcels 41.65 acres, 40.09 acres and 40.19 acres subject to a Land Conservation (Type II) contract.

Important Notes

- The Permit History provided may not include all records for this property. Further investigation may be required to obtain a more complete history, due to: address changes, parcel mergers, splits, retirements, etc.
- Date(s) listed in this report reflect the earliest known date(s) associated with each file. The date(s) listed are not associated with the current status.
- Permit Status Definitions <http://www.sonoma-county.org/prmd/docs/permitsplus/status_standards.pdf> (PDF: 57 kB) have been modified through time, to better identify milestones during the life span of a specific File Type. Many historical files reflect statuses which are no longer in use.
- Although every effort is made to provide complete and accurate information on this website, visitors are advised to contact appropriate Permit and Resource Management Department (PRMD) staff before making project decisions. This may involve contacting more than one section within PRMD (Building, Plan Check, Zoning, Well & Septic, etc.), since each section implements specific codes or ordinances which may affect your project.

Sonoma County Permit and Resource Management Department

Website: www.sonomacountypermits.org

Address: 2550 Ventura Avenue
Santa Rosa, CA 95403-2829

Phone: (707) 565-1900

Fax: (707) 565-1103

Permit History Lookup

This service provides convenient access to permit history information. All reasonable effort has been made to ensure the accuracy of the data provided. However, the data may be out of date or inaccurate. The County of Sonoma assumes no responsibility arising from the use of this information. This information and associated data are provided without warranty of any kind, either expressed or implied, including but not limited to, the implied warranties of merchantability and fitness for a particular purpose. Do not make any business decisions based on this data before validating the data with the Sonoma County Permit and Resource Management Department.

Permit History By Assessor's Parcel Number (APN)

Parcel Number: 049-020-029

Current Owner: Morning Sun Ranch Llc

Comment: From 049-020-25

Permits: 13

Permit History as of February 05, 2018

Number	Date	Status	Type	Description	Scanned
LLA17-0072	12/20/2017	Paid	Lot Line Adjustment	Request for a Lot Line Adjustment between three parcels, 40.09 acres, 40.02 acres, and 41.82 acres in size, resulting in three parcels 41.65 acres, 40.09 acres and 40.19 acres subject to a Land Conservation (Type II) contract.	
ACO14-0119	10/14/2014	Issued	Agricultural Development Permit Level 1	LEVEL I VINEYARD REPLANT 9.8 ACRES	
BLD13-3482	7/31/2013	Finaled	Building Permit With Plan Check	SOLAR GROUND MOUNT 5.28KW SYSTEM& TRENCH 150' FOR SFD	
BLD09-4024	10/6/2009	Finaled	Building Permit With Plan Check	NEW PORCH/TRELLIS & DECK @ SFD	Yes

| Number | Date | Status | Type | Description | Scanned |

Number	Date	Status	Type	Description	Scanned
AEX02-0023	5/22/2002	Recorded	Agricultural Exemption	AG EXEMPT BARN	
B-151137	11/10/1998	Expired	Building Permit No Plan Check	RAILING FOR PORCH & DECK	Yes
B-151067	11/5/1998	Finaled	Building Permit No Plan Check	REACTIVATE B-142783 & B-142784 SFD/GAR-FINAL INSP.	
T-022824	1/5/1998	Complete	Temporary Utilities	TEMP ELEC FOR NEW SFD (B-142783)	
B-142783	6/6/1997	Finaled	Building Permit With Plan Check	BUILD NEW SFD W/ ATT DECK AND COVERED PORCHES	Yes
B-142784	6/6/1997	Finaled	Building Permit With Plan Check	NEW DETACHED GARAGE - 936 SQ FT	
WEL96-0558	12/23/1996	Finaled	Well Permit	NEW WELL ROUTED TO GBAERT 12/23/96 ROUTED TO WELL FILE 1/2/97 WELL LOG REC 4/25/97, ROUTED TO WELL FILE FINALED BASED ON WELL LOG 6/17/99, ROUTED TO HARD FILE	Yes
B-139894	11/20/1996	Expired	Grading Permit	GRADING FOR SFD FOUNDATION/SHALE FOR RD & DRIVEWAY	Yes
SEP96-1431	10/28/1996	Finaled	Septic Permit	NEW SEPTIC SYSTEM FOR SFD ROUTED TO GBAERT 10/29/96 REROUTED TO GBAERTS FILE 11/25/96 ENG LTR REC 10/26/98, ROUTED TO GBAERTS FILE FINALED & ROUTED TO HARD FILE 10/28/98	Yes
Number	Date	Status	Type	Description	Scanned

Important Notes

- The Permit History provided may not include all records for this property. Further investigation may be required to obtain a more complete history, due to: address changes, parcel mergers, splits, retirements, etc.
- Date(s) listed in this report reflect the earliest known date(s) associated with each file. The date(s) listed are not associated with the current status.

- Permit Status Definitions <http://www.sonoma-county.org/prmd/docs/permitsplus/status_standards.pdf> (PDF: 57 kB) have been modified through time, to better identify milestones during the life span of a specific File Type. Many historical files reflect statuses which are no longer in use.
- Although every effort is made to provide complete and accurate information on this website, visitors are advised to contact appropriate Permit and Resource Management Department (PRMD) staff before making project decisions. This may involve contacting more than one section within PRMD (Building, Plan Check, Zoning, Well & Septic, etc.), since each section implements specific codes or ordinances which may affect your project.

County of Sonoma
Permit and Resource Management Department
California

Permit and Resource Management Department
DEPARTMENT OF INFORMATION SYSTEMS
COUNTY OF SONOMA

Base Map Theme

Planning
- Area & Specific Plans
- Local Area Development Guidelines
- Redevelopment Plans
- Williamson Act Land Contracts
  - Type I
  - Type I (Phase-out)
  - Type II
  - Type II (Phase-out)
  - Type II (Open Space)

Air Quality Measure
- Air Quality Control Board
  - Northern Sonoma County
  - Bay Area

Well and Septic
- Water Quality Control Board
  - North Coast Region
  - San Francisco Region
- Waiver Prohibition Areas
- Flood Prone Urban Areas

Wet Weather Zones
- Zone A - Petaluma
- Zone B - Sonoma
- Zone C - Santa Rosa
- Zone D - Sebastopol
- Zone E - Guerneville
- Zone F - Healdsburg
- Zone G - Cloverdale

Base Layers
- Geographic Places
- City Sphere of Influence
- City Urban Growth

- Planning Areas
- Urban Service Areas
- Lake Sonoma

Streets
- US Federal Highway
- State Highway
- Major Road
- Residential Street

Streams
- Perennial
- Intermittent

- Parcels
- City Limits

Supervisor Districts
- District 1
- District 2
- District 3
- District 4
- District 5

Fire Protection Responsibility Area
- Federal
- State
- Local

Map Scale and Reproduction methods limit precision in physical features displayed. This map is for illustrative purpose only, and is not suitable for parcel-specific decision making. Site-specific studies are required to draw parcel-specific conclusions. Aerial photos are provided by DigitalGlobe Copyright 2008.

Map Generated by: ActiveMap

Created on 2/5/2018 at 11:7AM

County of Sonoma

Permit and Resource Management Department

California

Base Map Theme

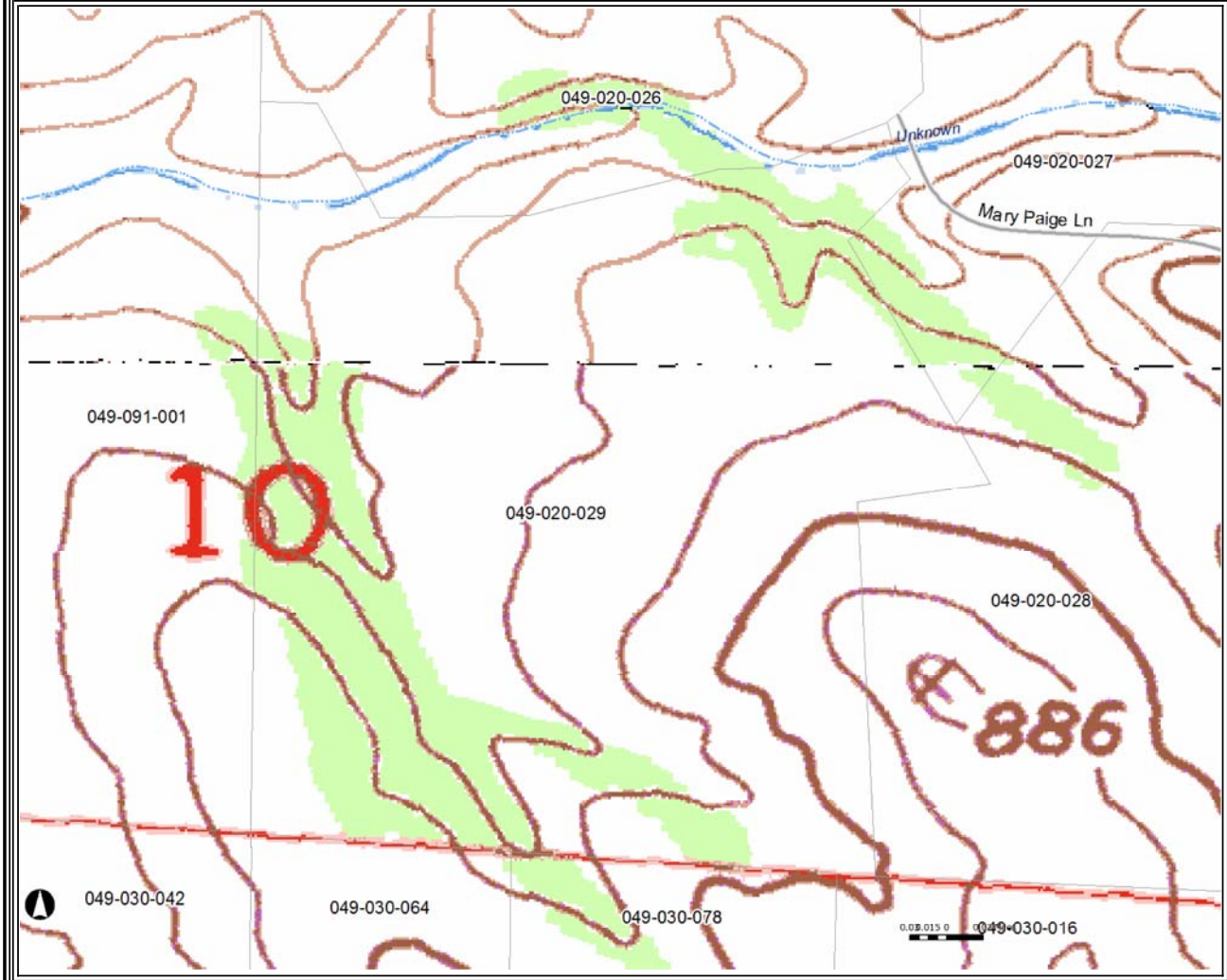

Planning
- Area & Specific Plans
- Local Area Development Guidelines
- Redevelopment Plans
- Williamson Act Land Contracts
  - Type I
  - Type I (Phase-out)
  - Type II
  - Type II (Phase-out)
  - Type II (Open Space)

Air Quality Measure
- Air Quality Control Board
  - Northern Sonoma County
  - Bay Area

Well and Septic
- Water Quality Control Board
  - North Coast Region
  - San Francisco Region
- Waiver Prohibition Areas
- Flood Prone Urban Areas

Wet Weather Zones
- Zone A - Petaluma
- Zone B - Sonoma
- Zone C - Santa Rosa
- Zone D - Sebastopol
- Zone E - Guerneville
- Zone F - Healdsburg
- Zone G - Cloverdale

Base Layers
- Geographic Places
- City Sphere of Influence
- City Urban Growth

- Planning Areas
- Urban Service Areas
- Lake Sonoma

Streets
- US Federal Highway
- State Highway
- Major Road
- Residential Street

Streams
- Perennial
- Intermittent

- Parcels
- City Limits

Supervisor Districts
- District 1
- District 2
- District 3
- District 4
- District 5

Fire Protection Responsibility Area
- Federal
- State
- Local

Map Scale and Reproduction methods limit precision in physical features displayed. This map is for illustrative purpose only, and is not suitable for parcel-specific decision making. Site-specific studies are required to draw parcel-specific conclusions. Aerial photos are provided by DigitalGlobe Copyright 2008.

Map Generated by: ActiveMap

Created on 2/5/2018 at 11:8AM

ActiveMap Property Report

049-020-029

Acres*	41.82
Zoning	LIA B6 40/40 (Ac/DU)/Ac MIN Z, RC50/50 SR
Land Use	LIA 40
Land Use Policies	Not Applicable
Planning Area Polices	Not Applicable
Planning Area	9 - Sonoma Valley
Urban Service Areas	Not Applicable
Groundwater Availability Areas	Zone 3 - Marginal groundwater
Area and Specific Plans	Bennett Valley Area Plan
Redevelopment Plan	Not Applicable
Local Area Dev Guidelines	Not Applicable
Williamson Act Land Contract	Type II Contract
City Sphere of Influence	Not Applicable
City Urban Growth	Not Applicable
Flood Prone Urban Area	Not Applicable
Air Quality Control Board	Bay Area Air Quality Management District
Waiver Prohibition Area	Not Applicable
Water Quality Control Board	North Coast Region
Wet Weather Zone	C - Santa Rosa
Supervisor District	District 1 - Susan Gorin
Fire Protection Responsibility Area	State
USGS Quad	28E, 34A
*Source: Sonoma County Assessor	
Assessor Map	Click Here

Article 04. - LIA Land Intensive Agriculture District.

Sec. 26-04-005. - Purpose.

Purpose: to enhance and protect lands best suited for permanent agricultural use and capable of relatively high production per acre of land; and to implement the provisions of the land intensive agriculture land use category of the General Plan and the policies of the agricultural resources element.

(Ord. No. 5964, § III, 1-31-2012; Ord. No. 4643, 1993.)

Sec. 26-04-010. - Permitted uses.

(a) On parcels exceeding two (2) acres, raising, feeding, maintaining and breeding of farm animals. When such farming involves animals which are continuously confined, such as veal calves, poultry, hogs and pigs, dairy cows, or similar livestock which may result in concentrations of animal waste, the use shall be subject to issuance of a zoning permit based upon written approval of the Sonoma County Health Services Department and the applicable regional water quality control board of a confined animal management plan. Horses, goats, sheep and similar farm animals are not considered to be confined animals for purposes of this chapter. The plan shall include provisions for:
    (1) Containment of waste to the site,
    (2) Reuse or disposal of waste in accordance with health and/or water quality regulations,
    (3) Mitigation of potential water quality impacts due to surface runoff of waste,
    (4) Control of vectors,

    In the event that the confined animal use is proposed within five hundred feet (500') of a nonagricultural land use category, it shall require prior approval of a use permit;

(b) On parcels of two (2) acres or less, raising, feeding, maintaining and breeding of not more than one (1) of the following per twenty thousand (20,000) square feet of area:
    (1) Five (5) hogs or pigs,
    (2) One (1) horse, mule, cow or steer,
    (3) Five (5) goats, sheep or similar animals,
    (4) Fifty (50) chickens or similar fowl,
    (5) Fifty (50) ducks or geese or one hundred (100) rabbits or similar animals,
    (6) The above limitations may be modified by the planning director upon submittal of a proposal statement which describes the extent of the domestic farming use and which is signed by the owners of all property within three hundred feet (300') of the subject property. The planning director may require the applicant to obtain a use permit if the director determines that the project might be detrimental to surrounding uses,
    (7) 4-H and FFA animal husbandry projects are permitted without limitation of parcel size, provided that the parcel contains at least twenty thousand (20,000) square feet and provided further a letter of project authorization is first submitted by the project advisor. The planning director may require the applicant to obtain a use permit when the director determines that the project might be detrimental to surrounding uses;

(c) Beekeeping;

(d) Outdoor crop production including wholesale nurseries, for growing and harvesting of shrubs, plants, flowers, tre fruits, vegetables, hay, grain and similar food and fiber crops other than cannabis, conducted and maintained in c with Article 65, RC Riparian Corridor Combining Zone;

(e) Agricultural support services involving no more than one (1) employee and occupying no more than one-half (1/2) acre of land and subject, at a minimum to the criteria of General Plan Policies AR-5e and AR-5f . Such services may include incidental sales of products related to the support service use but shall not include additional walk-in, over-the-counter retail sales;

The following factors shall be considered in determining an agricultural support service to be "clearly subordinate to on-site agricultural production" as provided in above Policy AR-5e:

(1) The geographic area of the lot devoted to the support service use in comparison to that remaining in agricultural production,

(2) Whether or not new structures or significant expansion of existing structures are needed to accommodate the support service use,

(3) The relative number of employees devoted to the support service use in comparison to that needed for agricultural production,

(4) Any such use on a parcel under a Williamson Act contract must be consistent with Government Code Section 51200 et seq. (the Williamson Act) and local rules and regulations;

(f) Incidental cleaning, grading, packing, polishing, sizing, storage and similar preparation of crops which are grown on the site, but not including agricultural processing;

(g) (1) Farm stand for the temporary or seasonal sales and promotion of crops grown or animals raised on the site including community supported agriculture, U-Pick and U-Cut operations.

(2) Farm retail sales facility subject to issuance of a zoning permit and compliance with Section 26-88-215;

(h) Residential uses include the following:

(1) Single-family detached dwelling unit(s) in accordance with the residential density permitted by the General Plan land use element, or permitted by a "B" combining district, whichever is more restrictive. These unit(s) may be manufactured homes, but only one (1) may be a manufactured home without a permanent foundation,

A manufactured home without a permanent foundation shall require prior approval of a zoning permit notice of which shall be posted at least ten (10) days prior to issuance, during which an appeal may be filed and processed pursuant to Section 26-92-040. Issuance of the zoning permit shall be subject, at a minimum, to the following conditions:

(i) The manufactured home shall be at least twelve feet (12') in width except those that are owned and occupied on the effective date of the ordinance codified in this chapter,

(ii) The manufactured home shall be skirted. All skirting shall be of a type approved by the state of California,

(iii) The manufactured home shall have one patio awning with a minimum dimension of nine feet (9') by twenty feet (20') and either a garage, carport or awning with a minimum dimension of ten feet (10') by twenty feet (20') for covered parking,

(iv) All manufactured home sites shall be landscaped,

(v) The manufactured home shall be occupied by the owner of the property or a relative of the owner;

(2) One (1) detached farm family dwelling unit per lot provided that a Williamson Act contract is in effect and

that the following requirements are met:

(i) An agricultural easement having a term equal to the useful life of the structure, but in no event less than twenty (20) years, shall be offered to the county at the time of application,

(ii) A covenant shall be recorded, in a form satisfactory to county counsel, which acknowledges that, in the event that the agricultural use is terminated on the property, the farm family dwelling shall become a nonconforming residential use;

(3) One (1) dwelling unit for full-time agricultural employees for each of the following agricultural uses conducted on the site:

(i) At least fifty (50) dairy cows, dairy sheep, or dairy goats,

(ii) At least twenty (20) acres of grapes, apples, pears, prunes,

(iii) At least twenty thousand (20,000) broilers, fifteen thousand (15,000) egg-layers or three thousand (3,000) turkeys,

(iv) At least one hundred (100) non-dairy sheep, goats, replacement heifers, beef cattle, or hogs,

(v) At least thirty (30) mature horses,

(vi) Wholesale nurseries with a minimum of either one (1) acre of propagating greenhouse or outdoor containers or three (3) acres of field-grown plant materials,

(vii) Any other agricultural use which the planning director determines to be of the same approximate agricultural value and intensity as Subsections (h)(3)(i) through (vi) of this section;

The dwelling unit(s) may be conventionally built homes or manufactured homes (with or without permanent foundations); provided, that manufactured homes without a permanent foundation shall require a zoning permit approved in the manner described in Subsection (h)(1) of this section. Agricultural employee units may be established within designated Class 4 water-scarce areas only where a hydrogeology report, as defined, certifies that the establishment and continuation of the additional residential use will not have significant adverse impacts on local or cumulative groundwater availability or yield,

Prior to the issuance of building or zoning permits for the employee unit(s), the property owner shall place on file with the planning department an affidavit that the unit(s) will be used to house persons employed on the premises for agricultural purposes. Further, a covenant shall be recorded, in a form satisfactory to county counsel, which acknowledges that in the event that the agricultural use is terminated on the property, the agricultural employee dwelling shall become a nonconforming residential use,

(4) Temporary farm worker camps consisting of up to four (4) self-contained recreational vehicles and/or travel trailers to house persons solely employed on the site for agricultural purposes for less than ninety (90) days, subject to the following:

The property owner must submit a written affidavit to the planning department, stating that the recreational vehicle and/or travel trailer will only be used to house persons solely employed on the site of a bona fide agricultural enterprise. The camp shall be subject to applicable septic regulations. The recreational vehicle or trailer shall be immediately removed from the site when it is no longer occupied by persons who are solely employed on the premises site;

(5) Seasonal farmworker housing which meets the standards set forth in Section 26-88-010(l). Seasonal farmworker housing shall also conform to such public health, building and fire safety criteria as may be established by resolution or ordinance of the board of supervisors,

(6) Year-round and extended seasonal farmworker housing which meets the standards set forth in Section 26-8 round and extended seasonal farmworker housing shall also conform to such public health, building, and fi as may be established by resolution or ordinance of the board of supervisors,

(7) One caretaker unit for properties with seasonal farmworker housing, subject to the provisions of Section 26-88-010 (l)(8),

(8) One guest house per lot,

(9) One (1) travel trailer per lot for use as temporary housing in accordance with Section 26-88-010(q) and provided that a travel trailer administrative permit is obtained and renewed annually,

(10) One (1) accessory dwelling unit per lot, pursuant to Section 26-88-060. Accessory dwelling units are not permitted on land subject to a Williamson Act contract;

(11) One junior accessory dwelling unit per lot, pursuant to Section 26-88-061.

(i) The following nonagricultural uses; provided, that the applicant must demonstrate that the use meets a local need, avoids conflict with agricultural activities and is consistent with Objective AR-4.1 and Policy AR-4a of the agricultural resources element:

(1) Boarding and training of horses subject to issuance of a zoning permit. Any such use on a parcel under a Williamson Act contract must be consistent with Government Code Section 51200 et seq. (the Williamson Act) and local rules and regulations,

(2) Home occupations subject to the requirements of Section 26-88-121 and approval of a zoning permit. Any home occupation use on a parcel under a Williamson Act contract must be consistent with Government Code Section 51200 et seq. (the Williamson Act) and local rules and regulations,

(3) Small residential community care facilities, except on land subject to a Williamson Act contract,

(4) Occasional cultural events, provided that a written notice stating "The Sonoma County Planning Department will issue a zoning permit for a cultural event (state nature and duration) on this property if a written appeal is not received within ten (10) days from the date of this notice," is posted on the property at least ten (10) days prior to issuance of a zoning permit, and no appeal pursuant to Section 26-92-040 has been received from any interested person, and provided that approval is secured from the following departments: sheriff, public health, fire services, building inspection and public works. In the event of an appeal, a hearing on the project shall be held pursuant to Section 26-92-040. Any such use on a parcel under a Williamson Act contract must be consistent with Government Code Section 51200 et seq. (the Williamson Act) and local rules and regulations,

(5) Management of land for watershed, for fish and wildlife habitat, fish rearing ponds, hunting and fishing, where these uses are incidental to the primary use,

(6) Small family day care. Any such use on a parcel under a Williamson Act contract must be consistent with Government Code Section 51200 et seq. (the Williamson Act) and local rules and regulations,

(7) Large family day care, subject to the issuance of a zoning permit and the standards of Sec. 26-88-080, except on land subject to a Williamson Act contract;

(8) Pet fancier facilities, provided that a pet fancier license is obtained from the division of animal regulation and renewed annually. Any such use on a parcel under a Williamson Act contract must be consistent with Government Code Section 51200 et seq. (the Williamson Act) and local rules and regulations,

(9) Public parks,

(10) Craft sales and garage sales not exceeding two (2) sales days per calendar year provided that prior notification is given to the California Highway Patrol and that adequate off-street parking is provided,

(11) Attached commercial telecommunication facilities subject to the applicable criteria set forth in Section

26-88-130,

(12) Minor freestanding commercial telecommunication facilities, subject to the applicable criteria set forth in Section 26-88-130, and subject to approval of a zoning permit, including environmental review, for which notice, including a site plan and one (1) elevation with dimensions for such facility, is mailed to adjacent property owners and posted on the subject property at least ten (10) days prior to issuance of the permit and provided that no appeal pursuant to Section 26-92-040 has been received from any interested person. In the event of an appeal, a hearing on the project shall be held pursuant to the above section. Any such use on a parcel under a Williamson Act contract must be consistent with Government Code Section 51200 et seq. (the Williamson Act) and local rules and regulations,

(13) Noncommercial telecommunication facilities eighty feet (80') or less in height subject to the applicable criteria set forth in Section 26-88-130. Facilities between forty feet (40') and eighty feet (80') in height are subject to approval of a ministerial zoning permit for which notice is mailed to adjacent property owners and posted on the subject property at least ten (10) days prior to issuance of the permit and provided that no appeal pursuant to Section 26-92-040 has been received from any interested person. In the event of an appeal, a hearing on the project shall be held pursuant to the above section,

(14) Small wind energy systems not located within a county-designated urban service area or within two thousand five hundred feet (2,500') of a county-designated Urban Service Area, subject to zoning permit approval and the standards in Section 26-88-135. Any such use on a parcel under a Williamson Act contract must be consistent with Government Code Section 51200 et seq. (the Williamson Act) and local rules and regulations,

(15) Agricultural farmstay, subject to issuance of a zoning permit and the standards set forth in Section 26-88-085. Any such use on a parcel under a Williamson Act contract must be consistent with Government Code Section 51200 et seq. (the Williamson Act) and local rules and regulations,

(16) Non-commercial arts and crafts studios not involving retail or wholesale sales. Any such use on a parcel under a Williamson Act contract must be consistent with Government Code Section 51200 et seq. (the Williamson Act) and local rules and regulations;

(17) Non-commercial composting when the source materials are obtained primarily onsite and the product is used to amend soils onsite or on adjacent parcels owned or operated by same property owner.

(j) Accessory buildings and uses appurtenant to the operation of the permitted uses. Accessory buildings may be constructed on vacant parcels of two (2) acres or more in advance of a primary permitted use. On vacant parcels less than two (2) acres, accessory buildings may only be constructed if less than one hundred twenty (120) square feet or as incidental to an existing agricultural use. Any such use on a parcel under a Williamson Act contract must be consistent with Government Code Section 51200 et seq. (the Williamson Act) and local rules and regulations;

(k) Minor timberland conversions, subject to compliance with the requirements of Section 26-88-140;

(l) Other nonresidential uses which in the opinion of the planning director are of a similar and compatible nature to those uses described in this Section;

(m) Small-scale agricultural processing facility subject to issuance of a zoning permit in compliance with Section 26-88-210;

(n) Cannabis cultivation for personal use in compliance with Section 26-88-258;

(o) Indoor crop production including wholesale nurseries for growing and harvesting of shrubs, plants, flowers, trees, vines, fruits, vegetables, hay, grain and similar food and fiber crops other than cannabis, in greenhouses or similar structures less than two thousand five hundred (2,500) square feet, conducted and maintained in

compliance with Article 65, RC Riparian Corridor Combining Zone.

(Ord. No. 6191 , § V(Exh. D), 1-24-2017; Ord. No. 6189 , §§ II(B), (G), (I), (J), 12-20-2016; Ord. No. 6089, § I(b), 11-24-2014; Ord. No. 6081, §§ III, IV, 7-29-2014; Ord. No. 5964, § III, 1-31-2012; Ord. No. 5569 § 7, 2005; Ord. No. 5435 § 2(b), 2003; Ord. No. 5429 § 3(a), 2003; Ord. No. 5361 § 2(a), 2002; Ord. No. 5342 § 4, 2002; Ord. No. 5016 § 1(A), 1997; Ord. No. 4985 § 1(b), 1996; Ord. No. 4973 § 3(a), 1996; Ord. No. 4723 § 1(b), 1993; Ord. No. 4653 § 1(c), 1993; Ord. No. 4643, 1993.)

Sec. 26-04-020. - Uses permitted with a use permit.

(a) Agricultural cultivation in the following areas, for which a management plan has not been approved pursuant to Section 26-04-010(d):
  (1) Within one hundred feet (100') from the top of the bank in the Russian River Riparian Corridor,
  (2) Within fifty feet (50') from the top of the bank in designated Flatland Riparian Corridors,
  (3) Within twenty-five feet (25') from the top of the bank in designated Upland Riparian Corridors;

(b) Livestock feed yards, animal sales yards;

(c) Commercial mushroom farming;

(d) Commercial stables not permitted under Section 26-04-010(i)(1), riding academies, and equestrian riding clubs. Any such use on a parcel under a Williamson Act contract must be consistent with Government Code Section 51200 et seq. (the Williamson Act) and local rules and regulations;

(e) Agricultural support services with more than one (1) and a maximum of three (3) employees or occupying more than one half (½) acre of land, but otherwise subject to the same criteria as Section 26-04-010(e). Any such use on a parcel under a Williamson Act contract must be consistent with Government Code Section 51200 et seq. (the Williamson Act) and local rules and regulations;

(f) Preparation of agricultural products which are not grown on site, processing of agricultural product of a type grown or produced primarily on site or in the local area, storage of agricultural products grown or processed on site, and bottling or canning of agricultural products grown or processed on site, subject, at a minimum, to the criteria of General Plan Policies AR-5c and AR-5g;

(g) Slaughterhouses, animal processing plants, rendering plants, fertilizer plants or yards which serve agricultural production in the local area and subject, at a minimum, to the criteria of General Plan Policies AR-5c and AR-5g. Any such use on a parcel under a Williamson Act contract must be consistent with Government Code Section 51200 et seq. (the Williamson Act) and local rules and regulations;

(h) Retail nurseries involving crops/plants which are not grown on the site, except on land subject to a Williamson Act contract;

(i) Tasting rooms and other temporary, seasonal or year-round sales and promotion of agricultural products grown or processed in the county subject to the minimum criteria of General Plan Policies AR-6d and AR-6f. This Subsection shall not be interpreted so as to require a use permit for uses allowed by Section 26-04-010(g);

(j) Promotional or marketing accommodations for private guests, provided, that the use, at a minimum, meets all of the following criteria:
  (1) The use promotes or markets agricultural products grown or processed on the site,
  (2) The scale of the use is appropriate to the production and/or processing use on the site,
  (3) The use complies with General Plan Policies AR-6d and AR-6f,
  (4) No commercial use of private guest accommodations is allowed,
  (5) Any such use on a parcel under a Williamson Act contract must be consistent with Government Code Section 51200 et seq. (the Williamson Act) and local rules and regulations;

(k) Dwelling unit(s) for full time agricultural employees which are transferred from another lot within this district and under the same ownership as the subject property. The number of units allowed shall be determined by the stan Section 26-04-010(h)(3). The units shall be located on the receiving parcel such that they are closer to the primary unit than to the property line;

(l) Temporary farm worker camps not permitted by Section 26-04-010(h);

(m) Seasonal farmworker housing that does not meet the road access, occupancy or setback standards of Section 26-88-010(l);

(n) Year-round and extended seasonal farmworker housing that does not meet the road access, occupancy limits, parcel size or setback standards of Section 26-88-010(o);

(o) The following nonagricultural uses; provided, that the applicant must demonstrate that the use meets a local need, avoids conflict with agricultural activities and is consistent with Objective AR-4.1 and Policy AR-4a of the agricultural resources element:

(1) Game preserves, refuges, and hunting clubs; however, any such use on a parcel under a Williamson Act contract must be consistent with Government Code Section 51200 et seq. (the Williamson Act) and local rules and regulations,

(2) Cemeteries, except on land subject to a Williamson Act contract,

(3) Commercial kennels, except on land subject to a Williamson Act contract,

(4) Minor public service uses or facilities (transmission and distribution lines and telecommunication facilities excepted), including, but not limited to reservoirs, storage tanks, pumping stations, and transformer stations. Any such use on a parcel under a Williamson Act contract must be consistent with Government Code Section 51200 et seq. (the Williamson Act) and local rules and regulations,

(5) Fire and police stations and training centers, service yards and parking lots which, at a minimum, meet the criteria of General Plan Policy PF-2 t and which are not otherwise exempt by state law. Such facilities are not permitted on land subject to a Williamson Act contract,

(6) Intermediate and major freestanding commercial telecommunication facilities subject at a minimum to the applicable criteria set forth in Section 26-88-130. Any such use on a parcel under a Williamson Act contract must be consistent with Government Code Section 51200 et seq. (the Williamson Act) and local rules and regulations,

(7) Noncommercial telecommunication facilities greater than eighty feet (80') in height subject at a minimum to the applicable criteria set forth in Section 26-88-130,

(8) Exploration and development of low temperature geothermal resources for other than power development purposes provided that at a minimum it is compatible with surrounding land uses. Any such use on a parcel under a Williamson Act contract must be consistent with Government Code Section 51200 et seq. (the Williamson Act) and local rules and regulations,

(9) Application of clean dredge material or biosolids from wastewater treatment plants subject, at a minimum, to the criteria of General Plan Policies PF-2s,

(10) Granges and similar community service facilities which do not adversely impact agriculture in the area. Any such use on a parcel under a Williamson Act contract must be consistent with Government Code Section 51200 et seq. (the Williamson Act) and local rules and regulations,

(11) Large residential community care facility, except on land subject to a Williamson Act contract,

(12) Day care center, except on land subject to a Williamson Act contract,

(13) Reserved.

(14) Golf courses and driving ranges shall be at the sole discretion of the county and subject, at a minimum,

to the following criteria:

(i) The proposed use is adjacent to a designated urban service boundary or includes an irrevocable offer of offsite unutilized development rights for all lands between the use and the urban service boundary,

(ii) Permanent open space or agricultural preservation is provided for the site of the proposed use and all areas for which development rights are acquired,

(iii) The use is located in close proximity to an existing wastewater treatment facility and includes the use of reclaimed wastewater in accordance with the regulations of the applicable regional water quality control agency,

(iv) The use is subject to design review approval and includes setbacks, buffers or other measures designed to minimize its impact on existing and potential agricultural uses in the area,

(v) Under no circumstances shall housing be included as part of the use, provided that a caretaker unit may be considered,

(vi) The use must be compatible with and not result in limitations on any agricultural operation,

(vii) The use shall not be conducted on lands subject to a Williamson Act contract or included in a timber production zone,

(viii) Facilities associated with the golf course and/or driving range shall be limited to those which serve golfers on the course or range, such as locker and shower facilities, pro shop with incidental sales of golfing equipment, snack bar and maintenance operations. Such facilities shall not include restaurants, other retail sales, lodging or similar uses,

(ix) Driving ranges shall not be operated during nighttime hours;

In the event that the above uses are proposed within a designated Community Separator, the criteria established by General Plan Policy OSRC-1c shall supersede the above criteria;

(15) Craft sales and garage sales involving three (3) or four (4) sales days per year,

(16) Small wind energy systems located within a county-designated urban service area or within two thousand five hundred feet (2,500') of a county-designated urban service area, subject to the standards in Section 26-88-135. Any such use on a parcel under a Williamson Act contract must be consistent with Government Code Section 51200 et seq. (the Williamson Act) and local rules and regulations,

(p) Live/work uses in conjunction with a legally established single family residential unit subject to the requirements of Section 26-88-122. Any live/work use on a parcel under Williamson Act contract must be consistent with Government Code Section 51200 et seq. (the Williamson Act) and local rules and regulations;

(q) Other nonresidential uses which in the opinion of the planning director area of a similar and compatible nature to those uses described in this section;

(r) Commercial cannabis medical uses in compliance with Sections 26-88-250 through 26-88-256.

(Ord. No. 6189 , § II(C), 12-20-2016; Ord. No. 5964, § III, 1-31-2012; Ord. No. 5569 § 7, 2005; Ord. No. 5435 § 2(c), 2003; Ord. No. 5429 § 3, 2003; Ord. No. 5361 § 2(i), 2002; Ord. No. 5342 § 4, 2002; Ord. No. 4973 § 3(b), 1996; Ord. No. 4781 § 2(B), 1994; Ord. No. 4643, 1993.)

Sec. 26-04-030. - Permitted residential density and development criteria.

The use of land and structures within this district is subject to this article, the general regulations of this chapter, and the provisions of any district which is combined herewith. Policies and criteria of the General Plan and any applicable specific or area plan or local area development guidelines shall supersede the standards herein.

(a) Density. Residential density shall be between twenty (20) and one hundred (100) acres per dwelling unit as s General Plan land use element or permitted by a "B" combining district, whichever is more restrictive. Howe units described in Section 26-04-010(h)(2) through (7) inclusive may be permitted in addition to the resident

(b) Minimum Lot Size. The minimum lot size for creation of new parcels shall be twenty (20) acres, provided, that it shall also meet the criteria of General Plan Policy AR-8c. In such cases where lots are clustered, a protective easement shall be applied to the remaining large parcel(s) which indicates that density has been transferred to the clustered area.

(c) Minimum Lot Width. The minimum average lot width within each lot is one hundred twenty-five feet (125').

(d) Maximum Building Height.

(1) Thirty-five feet (35') except that agricultural buildings and structures may reach up to fifty feet (50'). Additional height may be permitted provided that site plan approval in accordance with Article 82 is first secured,

(2) Maximum height for telecommunication facilities is subject to the provisions of this article and Section 26-88-130.

(e) Maximum Lot Coverage.

(1) On parcels of two acres in size or less: twenty percent (20%),

(2) On parcels greater than two acres up to and including five acres in size: 18,000 SF or fifteen percent (15%), whichever is greater,

(3) On parcels greater than five acres up to and including 20 acres in size: 30,000 SF or ten percent (10%), whichever is greater, and

(4) On parcels greater than 20 acres in size: 85,000 SF or five percent (5%), whichever is greater.

Exceptions may be allowed by the planning director for commercial greenhouses, large animal operations, and buildings required for the farm operation to meet water quality or other environmental protection regulations.

(f) Yard Requirements.

(1) Front or Street Side Yard. Thirty feet (30') except where combined with any B district and in no case shall the setback be less than fifty-five feet (55') from the centerline of all roads and streets, except as may be otherwise indicated on the district maps,

(2) Side Yard. Minimum ten feet (10'), except that in the case of a corner lot, the street side yard shall be the same as the front yard,

(3) Rear Yard. Twenty feet (20'),

(4) Watering troughs, feed troughs, accessory buildings used for the housing or maintenance of farm animals and accessory buildings and runs used for the housing or maintenance of kennel animals shall be located at least fifty feet (50') from the front property line, twenty feet (20') from any side or rear property line, and thirty feet (30') from any dwelling on the adjacent property,

(5) No garage or carport opening facing the street shall be located less than twenty feet (20') from any exterior property line, except that where twenty-five percent (25%) or more of the lots on any one (1) block or portion thereof in the same zoning district have been improved with garages or carports, the required front yard may be reduced to a depth equal to the average of the front yards

of the such garages or carports. However, in no case shall the front yards be reduced to less than ten feet (10'). Further, the permit and resource management department director may require a use permit if the reduction might result in a traffic hazard.

Notwithstanding the above, if a residence is elevated to meet flood requirements, the space underneath the structure may be utilized for a garage or carport if it will meet building codes, even if the ten foot (10') to twenty foot (20') setback cannot be met, subject to approval of Administrative Design Review.

(6) Cornices, eaves, canopies, bay windows, fireplaces and/or other cantilevered portions of structures, and similar architectural features may extend two feet (2') into any required yard. The maximum length of the projections shall not occupy more than one-third of the total length of the wall on which it is located. Uncovered porches, fire escapes or landing places may extend six feet (6') into any required front or rear yard and three feet (3') into any required side yard,

(7) Where twenty-five percent (25%) or more of the lots on any one (1) block or portion thereof in the same zoning district have been improved with buildings, the required front yard may be reduced to a depth equal to the average of the front yards of the improved lots, subject to the limitations of subsection (f)(5) of this section,

(8) Accessory buildings may be constructed within the required yards on the rear half of the lot; provided, that such buildings shall not occupy more than thirty percent (30%) of the width of any rear yard. Such accessory buildings shall not be located closer than ten feet (10') to the main buildings on adjacent lots. Notwithstanding the foregoing, swimming pools may occupy more than thirty percent (30%) of the width of any rear yard. A minimum of three feet (3') shall be maintained between the wall of a pool and the rear and side property lines, and from the main building on the same lot. Conventional pool accessory equipment (pump, filters, etc.) shall be exempt from setback restrictions. Additional setbacks may be required under the California Building Code. (Ord. No. 3932.)

(9) The yard requirements of Subsections (f)(1) and (2) of this section may be reduced up to fifty percent (50%) for agricultural buildings and structures if necessary for efficient farming operation.

(g) In compliance with applicable sections of the State Subdivision Map Act and the subdivision ordinance, a two (2)-way division of a parcel of land that is currently subject to a Williamson Act contract may be allowed, if all of the following apply:

(1) The resulting parcel is to be sold or leased for agricultural employee ("farmworker") housing, and is not more than five (5) acres in size. For the purposes of this section, "agricultural employee" shall have the same meaning as defined by Subdivision (b) of Section 1140.4 of the Labor Code,

(2) The parcel shall be sold or leased to a nonprofit organization, a city, a county, a housing authority, or a state agency, for the sole purpose of the provision and operation of farmworker housing. A lessee that is a nonprofit organization shall not sublease that parcel without the written consent of the landowner, and shall notify the county of such sublease,

(3) The parcel to be sold or leased shall be subject to a deed restriction that limits the use of the parcel to farmworker housing facilities for not less than thirty (30) years. The deed restriction shall also provide, through reversionary or similar provision, that the parcel shall automatically revert to and be merged with the parcel from which it was subdivided when the parcel ceases to be used for farmworker housing for a period of more than one (1) year. The deed restriction shall be in a form satisfactory to county counsel,

(4) There is a written agreement between the parties to the sale or lease of the parcel and their successor parcel to be sold or leased under joint management of the parties, subject to the terms and conditions of the Williamson Act contract,

(5) The parcel to be sold or leased is contiguous to one (1) or more parcels that are located within a designated urban service area, and which are zoned for and developed with urban residential, commercial, or industrial land uses.

(6) The farmworker housing project is provided pursuant to Section 26-88-010(l) (Seasonal farmworker housing) or Section 26-88-010(o) (Year-round and extended seasonal farmworker housing), and includes provisions designed to minimize potential impacts on surrounding agricultural and rural residential land uses,

A subdivision of land pursuant to this section shall not affect any Williamson Act contract executed pursuant to Article 3 (commencing with Section 51240) of the Government Code, and the parcel to be sold or leased shall remain subject to that contract.

(Ord. No. 5964, § III, 1-31-2012; Ord. No. 5711 § 7 (Exh. H), 2007; Ord. No. 5569 § 9, 2005; Ord. No. 4973 § 1(c), 1996; Ord. No. 4927 §§ 1, 6, 11, 1996; Ord. No. 4643, 1993.)

Article 78. - B Combining Districts.

Sec. 26-78-005. - Purpose.

Purpose: to specify residential density and/or minimum parcel or lot size for a particular parcel, lot or area

(Ord. No. 4643, 1993.)

Sec. 26-78-010. - Generally.

The following regulations shall apply to the respective B districts:

Combining	
District:	**Requirements:**
B6	The adopted zoning maps shall specify the maximum permitted density, determined by gross acreage for all residential uses. Minimum front, side and rear yard requirements and the minimum parcel or lot size, if not otherwise specified, shall conform to the base district with which the B6 district is combined unless specifically approved otherwise by the planning commission.
B7	Minimum parcel or lot size shall be as specified on the recorded final or parcel maps and the parcels or lots shall not be further subdivided. The B7 combining district signifies that the lot has been frozen in order to restrict further subdivision of large remaining parcels left after approval of a clustered subdivision as provided in general plan Policy LU-6c. A lot line adjustment may be applied for, processed, and approved pursuant to Chapter 25 of the Sonoma County Code and this chapter. Minimum front, side and rear yard requirements shall conform to the base district with which the B7 district is combined unless specifically approved otherwise by the planning commission.
B8	Minimum parcel or lot size shall be as specified on the recorded final or parcel map and the parcels or lots shall not be further subdivided. The B8 combining district signifies that the lot has been frozen for one of the following reasons:

	1. The property is designated rural residential on the general plan land use map, but is subject to a Williamson Act contract;
	2. The property lies within the designated urban service boundary surrounding a city where the county intends to limit urban development until annexation or similar occurrence pursuant to a general plan area policy;
	3. The property is subject to a specific plan or area plan policy where the county intends to limit urban development for the reasons set forth in the applicable plan.

A lot line adjustment may be applied for, processed, and approved pursuant to Chapter 25 of the Sonoma County Code and this chapter. Minimum front, side and rear yard requirements shall conform to the base district with which the B8 district is combined unless specifically approved otherwise by the planning commission.

(Ord. No. 4643, 1993.)

Article 65. - RC Riparian Corridor Combining Zone.

Sec. 26-65-005. - Purpose.

The RC combining zone is established to protect biotic resource communities, including critical habitat areas within and along riparian corridors, for their habitat and environmental value, and to implement the provisions of the General Plan Open Space and Resource Conservation and Water Resources Elements. These provisions are intended to protect and enhance riparian corridors and functions along designated streams, balancing the need for agricultural production, urban development, timber and mining operations, and other land uses with the preservation of riparian vegetation, protection of water resources, floodplain management, wildlife habitat and movement, stream shade, fisheries, water quality, channel stability, groundwater recharge, opportunities for recreation, education and aesthetic appreciation and other riparian functions and values.

(Ord. No. 6089, § I(d)(Exh. A), 11-24-2014)

Sec. 26-65-010. - Applicability.

The RC combining zone shall be applied to designated streams and include the stream bed and bank and an adjacent streamside conservation area on each side of the stream as measured from the top of the higher bank. The minimum streamside conservation area shall be shown in the zoning database followed by the minimum setback for agricultural cultivation (e.g., RC 100/50). Where the drip line of existing riparian trees with trunks located wholly or partially within the streamside conservation area extends beyond the streamside conservation area boundary, as indicated in the zoning database, the boundary shall be increased to include the outer drip line of the riparian trees.

(Ord. No. 6089, § I(d)(Exh. A), 11-24-2014)

Sec. 26-65-020. - Determination of streamside conservation areas and setbacks for agricultural cultivation.

The streamside conservation area indicated in the zoning database is approximate to allow for a parcel-specific determination of the boundary based upon the location of the top of the higher bank and existing riparian vegetation. The streamside conservation area shall be determined by the director. The setback for agricultural cultivation indicated in the zoning database is also approximate to allow for a site-specific determination of the boundary based upon the location of the top of the higher bank, existing riparian vegetation, and, for upland areas of 50-foot riparian corridors, the slope and soil types of the planting area. The setback for agricultural cultivation shall be determined by the agricultural commissioner.

(Ord. No. 6089, § I(d)(Exh. A), 11-24-2014)

Sec. 26-65-030. - Prohibited uses and exceptions.

Except as allowed by Section 26-65-040, grading, vegetation removal, agricultural cultivation, structures, roads, utility lines, and parking lots shall be prohibited within any stream channel or streamside conservation area.

A. An exception to this prohibition may be approved by the director with a zoning permit if:
    1. It makes a parcel unbuildable, provided vegetation removal is minimized;
    2. The use involves the minor expansion of an existing legally established structure in conformance with Article 94 where it is demonstrated that the expansion will be accomplished with minimum vegetation removal and protection of riparian functions;
    3. The use involves only the maintenance, restoration, or reconstruction of an existing legally established structure or use in conformance with Article 94; or
    4. The director determines that the affected area has no substantial value for riparian functions.
B. An exception to this prohibition may be approved with a use permit if a conservation plan is adopted that provides for the appropriate protection of the biotic resources, water quality, floodplain management, bank stability, groundwater recharge, and other applicable riparian functions. Off-site mitigation will be considered only where on-site mitigation is infeasible or would provide superior ecological benefits, as determined by the director.

(Ord. No. 6089, § I(d)(Exh. A), 11-24-2014)

Sec. 26-65-040. - Allowed land uses, activities and permit requirements.

The following activities and uses may be allowed within a streamside conservation area, if allowed by the base zone and any combining zones, subject to any required permits and the standards specified in this section. These activities and uses shall also be conducted and maintained in compliance with any prohibitions, permits, approvals, or authorizations required by applicable resource agencies.

A. Stream maintenance and restoration carried out or overseen by the Sonoma County Water Agency.
B. Levee maintenance.
C. Invasive plant removal, such as Himalayan blackberry (Rubus armeniacus), giant reed (Arundo donax), salt cedar (Tamrix sp.), and star thistle (Centaurea solstitialis), not exceeding five (5) acres in disturbed area, principally involving hand labor and not using mechanized equipment.
D. Streamside maintenance and small riparian habitat restoration not exceeding five (5) acres of disturbed area, principally involving hand labor and not using mechanized equipment, as described by State CEQA Guidelines Section 15333, subject to a zoning permit.

E. Stream dams and stream-related water storage systems, subject to a zoning permit.

F. Road and utility line crossings in compliance with county road construction standards and maintenance guidelines, subject to a zoning permit.

G. Fencing and maintenance of existing outdoor activity areas, such as yards, gardens, and landscaped or natural vegetation, associated with a legally established structure or use and not involving further encroachment into existing riparian vegetation.

H. The following agricultural activities, provided that they are conducted and maintained in compliance with agricultural best management practices developed or referenced by the agricultural commissioner, or defined in a farm or ranch water quality plan acceptable to the agricultural commissioner. The agricultural commissioner shall determine the applicable agricultural best management practices and shall enforce the provisions of this subsection.

   1. Grazing and similar agricultural production, not involving cultivation or structures. Livestock control fencing and watering facilities are allowed.

   2. Agricultural cultivation and related access roads, drainage, planting, seeding, fertilizing, weeding, tree trimming, irrigation, and harvesting that do not involve the removal of existing contiguous riparian vegetation within two hundred feet (200') of the top of the higher bank, and are located as follows:

      a. No closer than one hundred feet (100') from the top of the higher bank in the 200-foot riparian corridor for the Russian River;

      b. No closer than fifty feet (50') from the top of the higher bank in the 100-foot riparian corridors designated in the General Plan and the upland areas of the 50-foot riparian corridors; or

      c. No closer than twenty-five feet (25') from the top of the higher bank in all other riparian corridors.

   3. Replanting existing cropland and related access roads, drainage, planting, seeding, fertilizing, weeding, tree trimming, irrigation, and harvesting that are located closer to the top of the higher bank than specified in Subsection 26-65-040.H.2, provided that the existing cropland is under active cultivation and the footprint of the planting area is not increased within the applicable setback for agricultural cultivation.

   4. Filter strips, equipment turnarounds, grassy avenues, and fencing associated with agricultural cultivation that does not involve the removal of existing contiguous riparian vegetation within two hundred feet (200') of the top of the higher bank.

I. Selective vegetation removal as part of an integrated pest management program administered by the agricultural commissioner.

J. Wells in compliance with Sonoma County Code Chapter 25B (Water Wells).

K. Fire fuel management in compliance with county fire safe standards, provided that no redwood trees are removed and vegetation removal is limited to the minimum required for

fire safety purposes. New development located within one hundred feet (100') of any riparian corridor shall be allowed with a zoning permit only where there are no feasible alternative development locations that do not require vegetation removal for fire protection and fire resistive construction materials are used to avoid or minimize the need for vegetation removal in the riparian corridor.

L. Bikeways, trails, and parks on publicly owned land or public use easements, or on private lands, subject to a zoning permit.

M. Temporary seasonal gangway and floating dock of up to one hundred twenty square feet (120' sq.) with encapsulated floatation and grated deck, subject to a zoning permit.

N. Timber operations conducted in compliance with an approved timber harvest plan.

O. Tree removal subject to a zoning permit, to protect life or property from the threat of harm posed by a dead, dying, diseased, or damaged tree likely to die within one (1) year of the date proposed for removal, or a tree at risk of falling when the structural instability cannot be remedied. A report by a certified arborist or registered professional forester documenting the hazardous condition and a tree replacement plan is required.

P. Mining operations, subject to a use permit for surface mining activities in compliance with the Chapter 26A (Surface Mining) of this code.

Q. Other activities or uses not meeting the above criteria may be permitted with an exception under Section 26-65-030 (Prohibited Uses and Exceptions), subject to a use permit and approval of a conservation plan.

(Ord. No. 6089, § I(d)(Exh. A), 11-24-2014)

Article 64. - SR Scenic Resources Combining District.

Sec. 26-64-005. - Purpose.

Purpose: to preserve the visual character and scenic resources of lands in the county and to implement the provisions of Sections 2.1, 2.2 and 2.3 of the general plan open space element.

(Ord. No. 4643, 1993.)

Sec. 26-64-010. - Development criteria.

Maximum building heights, minimum lot areas and lot widths, yard requirements and maximum percentages of lot coverage shall comply with the requirements for the districts with which the SR regulations are combined unless otherwise provided herein.

(Ord. No. 4643, 1993.)

Sec. 26-64-020. - Community separators and scenic landscape units.

(a) All structures, except certain telecommunications facilities as provided for in Section 26-64-040, located within community separators and scenic landscape units illustrated on Figures OS-5a through OS-5i, inclusive, of the general plan open space element and included within the SR district shall be subject to the following criteria:

(1) Structures shall be sited below exposed ridgelines;

(2) Structures shall use natural landforms and existing vegetation to screen them from view from public roads. On exposed sites, screening with native, fire resistant plants may be required;

(3) Cuts and fills are discouraged, and where practical, driveways are screened from public view;

(4) Utilities are placed underground where economically practical;

The above criteria shall not apply to agricultural accessory structures which do not require a use permit in the district with which this district is combined.

In the event that compliance with these standards would make a parcel unbuildable, structures shall be sited where minimum visual impacts would result.

(b) In addition to the criteria listed in subsection (a) of this section, the following standards shall apply to subdivisions within community separators and scenic landscape units and included within the SR district unless otherwise provided herein:

(1) Building envelopes shall be established for structures. Use of height limitations should be considered, if necessary to further mitigate visual impacts;

(2) Clustering shall be used to reduce visual impact where consistent with the applicable base district;

(3) Building sites and roadways shall be located to preserve trees and tree stands as provided in Section 26-88-040(m) of this chapter;

(4) To the extent allowed by law, dedication of a permanent scenic or agricultural easement shall be required at the time of subdivision for projects in community separators. Consider requiring such

easements in critical scenic landscape units pursuant to general plan Policy OS-2g.

(c) Where development occurs on parcels located both within scenic landscape units and adjacent to scenic corridors, the more restrictive provisions set forth in this article shall apply.

(d) Additional or varied development may be allowed in designated community separators and scenic landscape units in accordance with general plan Policies OS-1c, and OS-2c, respectively.

(e) Minor timberland conversions shall be allowed within community separators and scenic landscape units, subject to compliance with the requirements of this article and Section 2-88-140.

(f) Certain single-family dwelling units and appurtenant structures within the area covered by the Taylor Mountain/Sonoma Mountain development guidelines shall be subject to Section 26-90-050, as specified therein. Where the provisions of this section conflict with the provisions of Section 26-90-050, the general plan, or any applicable area plan, the more restrictive provisions shall apply.

(Ord. No. 5132 § 2, 1999: Ord. No. 4985 § 1(d), 1996; Ord. No. 4973 § 12(a), 1996; Ord. No. 4643, 1993.)

Sec. 26-64-030. - Scenic corridors.

The following provisions shall apply to properties along scenic corridors illustrated on Figures OS-5a through OS-5i, inclusive, of the general plan open space element unless otherwise provided herein:

(a) All structures located within scenic corridors established outside of the urban service area boundaries shown on Figures LU-5a through LU-5i, inclusive, of the general plan land use element shall be subject to the setbacks of thirty percent (30%) of the depth of the lot to a maximum of two hundred feet (200') from the centerline of the road. Development within the setback shall be prohibited with the following exceptions, where such uses are allowed by the base district with which this district is combined:

(1) New barns and similar agricultural support structures which are added to existing farm complexes provided that such structures proposed within a state scenic highway or where local design review exists by community choice in an adopted specific or area plan are subject to design review;

(2) New barns and similar agricultural support structures which do not require a use permit in this chapter; provided, however, that such structures proposed within a State Scenic Highway or where local design review exists by community choice in an adopted specific or area plan are subject to design review;

(3) Maintenance, restoration, reconstruction or minor expansion of existing structures;

(4) Certain telecommunication facilities as provided in Section 26-64-040;

(5) Other new structures provided they are subject to design review and

(i) They are associated with existing structures,

(ii) There is no other reasonable location for the structure,

(iii) The location within the setback is necessary for the use, or

(iv) Existing vegetation and topography screen the use;

(6) Compliance with the setback would render the parcel unbuildable;

(7) Satellite dishes which are not visible from the roadway.

(b) Where the scenic corridor setback provided for in Section 26-64-030(a), conflicts with the scenic

corridor setback along Highway 12 established by Ordinance 1810, the latter shall apply.

(c) A building setback of twenty feet (20') shall be applied along the Highway 101 scenic corridor to properties which are within the urban service area boundaries shown on Figures LU-5b, -5c, -5e, -5g, and -5h of the general plan land use element, to be reserved for landscaping.

(d) Where development occurs on parcels located both within scenic landscape units and adjacent to scenic corridors, the more restrictive provisions set forth in this article shall apply.

(e) Building permits within the setback established in Section 26-64-030(a) along Bohemian Highway between Occidental and Freestone and Bodega Highway between Bodega and Freestone shall be referred to the county landmarks commission for review and recommendation.

(Ord. No. 4973 § 12(b), 1996; Ord. No. 4643, 1993.)

Sec. 26-64-040. - Telecommunication facilities in the SR district.

The following provisions shall apply to telecommunication facilities on properties in community separators, scenic landscape units, and scenic corridors as shown on Figures OS-5a through OS-5i, inclusive, of the general plan open space element.

Telecommunication facilities which are allowed by the applicable base district shall meet the provisions of said base district and the applicable standards of Section 26-64-020 or 26-64-030, except that:

(a) An attached commercial telecommunication facility shall also be subject to design review approval.

(b) A noncommercial telecommunication facility shall be located, designed, and screened to blend with the existing natural or built surroundings so as to minimize visual impacts to the extent feasible. While cuts and fills are discouraged, they should be considered if, on balance, they enhance the overall scenic quality of the designated scenic resource area.

(c) A freestanding commercial telecommunication facility may be considered subject to the following additional criteria:

(1) The facility shall be subject to approval of a use permit.

(2) While cuts and fills are discouraged, they should be considered if they result in enhancement of the overall scenic quality of the designated scenic resource area.

(3) An alternatives analysis shall be prepared by or on behalf of the applicant, subject to the approval of the decision making body, which meets the requirements of Section 26-88-130(a)(3)(xiv).

(4) A visual analysis, which may include photo montage, field mock up, or other techniques, shall be prepared by or on behalf of the applicant which identifies the potential visual impacts, at design capacity, of the proposed facility and its feasible alternatives. Consideration shall be given to views from public areas as well as from private residences, but shall focus on preservation of scenic resources. The analysis shall assess the cumulative impacts of the proposed facility and other existing and foreseeable telecommunication facilities, and shall identify and include all feasible mitigation measures consistent with the technological requirements of the proposed telecommunication service.

(Ord. No. 4973 § 12(c), 1996.)

Sec. 26-64-050. - Design review approval.

(a) All plans for land divisions or development projects shall be reviewed and approved, conditionally approved, or denied by the planning director on the basis of compliance with the provisions of this article. Where a use permit is required and following design review approval, development plans shall be reviewed and acted upon by the board of zoning adjustments/planning commission. Where a local citizen's committee has been recognized by the board of supervisors, development plans shall be submitted to such committee for review and advisory recommendation prior to action by the planning director.

(b) For purposes of this section, "development project" means construction, alteration, or modification of a residential, commercial, or industrial structure or appurtenant structure, except as follows. Agricultural uses and structures, including agricultural employee housing and farm family dwellings, are exempt from design review under this section to the extent consistent with the agricultural resources and open space elements of the Sonoma County general plan or other sections of this chapter.

(c) Nothing in this section is intended to trigger the requirements of the California Environmental Quality Act beyond what would exist in the absence of this section.

(Ord. 5132 § 3, 1999.)

WOOD DESTROYING PESTS AND ORGANISMS INSPECTION REPORT

Building No.	Street	City	Zip	Date of Inspection	Page
121	Mary Paige Lane	Santa Rosa	95404	03/27/18	1 of 10

SCHORK INSPECTION SERVICES INC.
2209 SPRINGWOOD COURT
SANTA ROSA, CA 95403-8101
Phone: 707-571-8177 Fax: 707-527-9444
killabug4u@aol.com
Registration # PR4556

Report # 121marypai

Ordered by:	Property Owner and/or Party of Interest:	Report sent to:
Atrisen Sotheby's International **Mary Haufler** **403 Chinn** **Santa Rosa, CA 95404**	**David Phillips** **121 Mary Paige Lane, Santa Rosa, CA 95404**	**David Phillips** **121 Mary Paige Lane, Santa Rosa, CA 95404**

COMPLETE REPORT [X] LIMITED REPORT [ ] SUPPLEMENTAL REPORT [ ] REINSPECTION REPORT [ ]

General Description:
Single story, frame, rustic siding, decking garage attached.

Inspection Tag Posted:
Attic

Other Tags Posted:
None noted

An inspection has been made of the structure(s) shown on the diagram in accordance with the Structural Pest Control Act. Detached porches, detached steps, detached decks and any other structures not on the diagram were not inspected. Diagram is not to scale. Locations are only approximate.

Subterranean Termites [ ] Drywood Termites [ ] Fungus / Dryrot [X] Other Findings [X] Further Inspection [X]

If any of the above boxes are checked, it indicates that there were visible problems in accessible areas. Read the report for details on checked items.

KEY: 1 - Exterior 2 - Garage 3 - Interior 4 - Substructure Area 5 - Attic Spaces

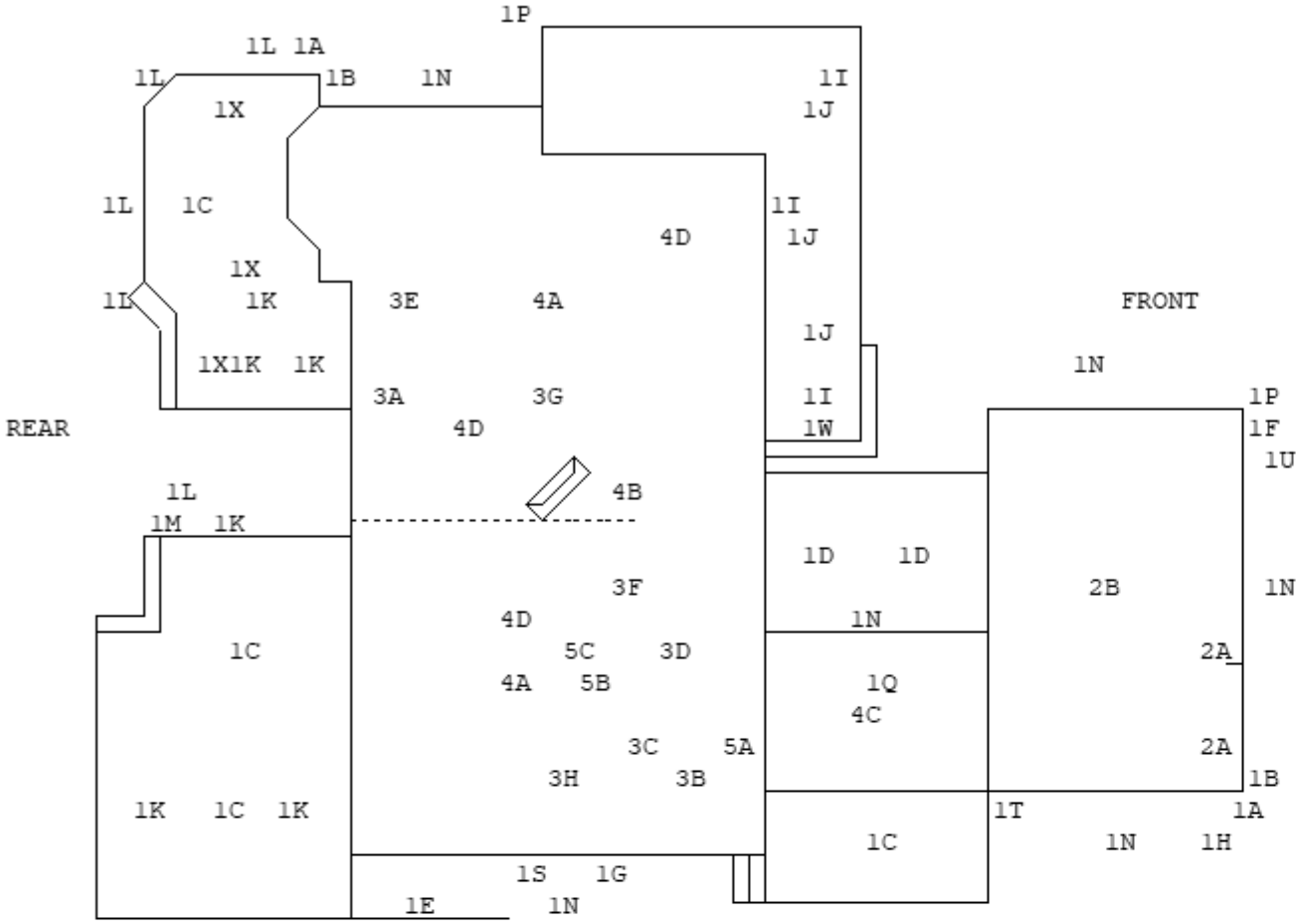

Inspected by: LAWRENCE J. SCHORK **State License No.** OPR6686 **Signature** _____

You are entitled to obtain copies of all reports and completion notices on this property reported to the Structural Pest Control Board during the preceding two years. To obtain copies contact: Structural Pest Control Board, 2005 Evergreen Street, Suite 1500, Sacramento, California, 95815-3831.

NOTE: Questions or problems concerning the above report should be directed to the manager of the company. Unresolved questions or problems with services performed may be directed to the Structural Pest Control Board at (916) 561-8708, (800) 737-8188 or www.pestboard.ca.gov.

WOOD DESTROYING PESTS AND ORGANISMS INSPECTION REPORT

Building No.	Street	City	Zip	Date of Inspection	Report #	Page
121	**Mary Paige Lane**	**Santa Rosa**	**95404**	**03/27/18**	**121marypai**	**2 of 10**

PLEASE READ THE FOLLOWING CAREFULLY.

* GENERAL INFORMATION THAT MAY OR MAY NOT APPLY TO THIS STRUCTURE *

Certain areas are recognized by the industry as inaccessible and/or for, other reasons not inspected. These include but are not limited to, Inaccessible and/or insulated attics or portions thereof, attics with less than eighteen inches of clear crawl space, interior of hollow walls; spaces between a floor or porch deck and the ceiling below, areas where there is no access without defacing or tearing out of lumber, masonry or finished work; areas where encumbrances and storage conditions or locks make inspection impractical, and areas of timbers around eaves, gables, in attics, or areas above 10 feet in height, that would require the use of an extension ladder, and a fall restraint system, (Effective Jan 2017, installed by others), for ladder heights above 4 feet for access and inspection. These areas were not inspected unless described in this report. We recommend further inspection if there is any question about the above listed areas.

An inspection report expresses the absence or presence of wood destroying pests and organisms in areas physically and visibly accessible for inspection, and is predominately a noninvasive visual inspection only. There is no requirement in the law making probing or destructive testing part of this type of inspection. This company is not responsible for conditions found by others using destructive probing, which were not visible, prior to the invasive probing. This company will inspect and document these conditions on a supplemental inspection report when advised of such conditions. THIS IS NOT A GENERAL PEST CONTROL INSPECTION REPORT. (I.e. rodents, vermin, snakes, spiders, or other insect conditions which we are not licensed to ID or exterminate.)

A standard inspection report covers conditions relative to wood destroying organisms, termites fungus (wet rot), boring beetles, and other wood destroying pests found in exposed accessible structural timbers in the basement and or below the first subfloor level, including those areas on the interior and exterior of the structure which are visibly and physically accessible for inspection, and is intended to be reasonably detailed and accurate.

This report is limited to what was found in the exposed and physically accessible areas and what we deemed necessary to document at the time of inspection. We assume no responsibility for concealed or inaccessible damage, infestation or infection that was not observed by the inspector without excavating soil, dismantling of heating ducts, removal of insulation, or opening timbers, walls, floor coverings, or interior of closed decking and/or porch hand rails, or floors, ceilings, moving of furnishings, installed carpet, appliances, or stoves is not with the scope of an inspection. We shall not be liable for any damage resulting from probing, cutting, opening or removal, or otherwise of timbers, walls, floors, floor coverings, or other parts of the structure inspected.

In the course of inspection, if reason is found by the inspector to suspect hidden infestation, infection or damage in a concealed or inaccessible area, recommendations for further inspection will be made, and an additional inspection fee charged.

This company will reinspect repairs done by others within four months (4) from the date of the original inspection. A Charge if any can be no greater that the original inspection fee for each reinspection. A reinspection must be done within ten (10) working days of the request. The reinspection is a visual inspection of finished accessible surfaces, if inspection of concealed areas is desired, inspection of work in progress will be necessary. Any Guarantees must be received from the parties performing repairs, not the inspector or the inspection company. An exception to the fee rule above is when the inspector performs more than one inspection, of repairs in progress by others. Charges in these cases will vary depending on the length of time involved, and will be in addition to any charges for work performed by this company

The inspection of concealed or inaccessible areas including areas behind EIFS (exterior insulation finish systems), detached garages, walkways, retaining walls, fences, interior of closed decking and porch rails, other out buildings, or structures, and water testing of stall showers over finished ceilings, were not inspected unless requested. These areas can be inspected, at

additional cost, upon written authorization.

When infestation and damaged is described in the report, the extent of the damage is not always evident to the inspector. Therefore, further inspection is recommended in any case where areas are inaccessible for inspection. If any damage is uncovered during repairs, previously hidden or inaccessible, a supplemental report can be generated to outline the findings and extended recommendation for the inaccessible damage, and will be contracted for separately before work continues in the area.

Recommendations will be made for correction and or control of actual infestation or infection, and damage found. Conditions found by the inspector that are likely to cause infestations or infections will be reported.
Any further inspection recommended must be authorized in writing by the property owner, or their agent, and/or the buyer, and/or agent and must be paid for at the time of inspection, unless otherwise arranged. Further inspection shall be reported on a supplemental report and any work contracted for separately from the original report. The further inspection fee will not exceed the original inspection fee.

Further inspection is recommended of flooded areas, contaminated areas, and any area covered with insulation, or inaccessible because of heating ducts and/or plumbing, and will be performed if requested in writing, after standing water is gone, and sufficient drying has taken place to allow for complete access, contaminated area cleaned up, insulation removed, heating ducts dismantled and/or plumbing moved, by others prior to inspection.

This report is subject to review ninety days from the date shown on the report. If the forgoing and the information given herein is in variance with the desires and instructions of any person concerned with this report or fails to conform to known data about the property, inform Schork Inspection Services Inc. immediately at 707-571-8177 and refrain from use of this report until a full understanding is reached.

Recommendations for corrective measures given in this report are subject to local city and/or county building codes and may require a building permit. Parties of interest should consult with the local city and/or county building officials regarding permit requirements for repair of specific items in this report. Any changes made by those agencies in the plans or specifications of repair, can result in issuance of a separate report with changes in writing, and added cost of repair. Parties contracting to have work performed are responsible for the added cost.

Location of conditions indicated on the diagram are approximate locations. Persons undertaking repairs are responsible for all necessary repairs, including those which may be extensions of repair into inaccessible areas. Inaccessible areas are subject to additional charge.

The bottom of the diagram is the front of the structure, and the top of the diagram is the rear of the structure, unless noted otherwise on the diagram. The diagram is not a scale drawing, only a representation of the structure outline.

Persons undertaking and performing structural repairs on the property need to have the knowledge, expertise, and licenses necessary to complete the work, and accept full liability for any work performed. The use of alternative repair methods other than described in this report, as well as the quality of repair are the sole responsibility of the person performing the work. No guarantees are expressed or implied on work performed by others.

If there are areas of the structure where repairs are evident, this company cannot and will not guarantee the quality of the materials used, the workmanship, or the extent of the repair into inaccessible areas where work has been performed by others. This is the responsibility of the person who performed the work. Further questions pertaining to the repairs or guarantees should be directed to the person or contractor who performed the work. Building code compliance is the

responsibility of the parties who did the work, and the city and/or county building officials, not the wood destroying organisms inspector.

You should be aware of Business and Professions Code 7024, 7044, and 7048, which state that it is illegal for unlicensed people to do work on a property being sold for one year prior to the date of sale. People doing such work should be prepared to provide license numbers, insurance coverage, and guarantees to other parties of interest in the property.
Buyers of the property are entitled to know who is doing, or did the work, that they are qualified, and the buyers will have recourse if there is a problem with the work at a later date.

Business and Professions Code Division 3.8552 Unlawful Representation, It is unlawful for any person to advertise or represent that any pest control work, or chemical application, in whole or in part has been done on a structure, unless the work has been performed by a person licensed under this chapter. THIS COMPANY CANNOT REINSPECT, CONFIRM, OR CERTIFY CHEMICAL TREATMENTS PERFORMED BY A NON-LICENSED PERSON. ALL CHEMICAL TREATMENTS MUST BE PERFORMED BY A LICENSED CHEMICAL APPLICATOR.

The charge for services that this company subcontracts to another registered company may include this company's charges for arranging and administering such services that are in addition to the direct cost associated with paying the contractor. You may accept Schork Inspection Services Inc. bid or you may choose to contract directly with another registered company, person, or entity, licensed to perform the work. If you choose to contract directly with another registered company, person or entity, Schork Inspection Services Inc. will not be responsible for any act or omission in the performance of the work you directly contracted for others to perform.

NOTICE: REPORTS ON THIS STRUCTURE PREPARED BY VARIOUS REGISTERED COMPANIES SHOULD LIST THE SAME FINDINGS (IE TERMITE INFESTATION, TERMITE DAMAGE, FUNGUS DAMAGE ETC) HOWEVER RECOMMENDATIONS TO CORRECT THESE FINDINGS MAY VARY FROM COMPANY TO COMPANY. YOU HAVE THE RIGHT TO SEEK A SECOND OPINION FROM ANOTHER COMPANY.

This inspection does not include an inspection of the exterior surface of the roof, gables, siding, eaves or attics above 8 feet in height that would require an extension ladder and a fall restraint system, installed by others for inspections above 4 feet (effective Jan 2017). If you want the water tightness of the roof determined, you should contact a roofing contractor who is licensed by the Contractors State License Board. This inspection does not include a plumbing, electrical, engineering analysis, asbestos or related hazards, or earth quake soundness of the structure inspection. This inspection does not include an inspection of areas behind EIFS (Exterior insulation finish systems. This inspection does not include an inspection for the absence or presence of health related molds or fungi. The presence of moisture conditions can be conducive to mold growth. Under California law we are not qualified, nor authorized or licensed to inspect for health related molds or fungi. Parties of interest should consult with individual specialist and/or industrial Hygienist regarding any of the above listed areas or conditions that may apply to this structure. This inspection does not include an inspection for lead based paint.

Under mechanics lien law any structural pest control operator who contracts to do work for you, any contractor, sub-contractor, laborer, supplier, or other person who helps to improve your property, but is not paid for his work or supplies, has the right to enforce a claim against your property. This means that after a court hearing, your property could be sold by a court officer and the proceeds of the sale used to satisfy the indebtedness. This can happen even if you have paid your contractor in full, and sub-contractors laborers, or suppliers remain unpaid.

To preserve their right to file a claim or lien against your property, certain claimants such as sub-contractors, or material suppliers are required to provide you with a document entitled Preliminary Notice. General contractors and laborers for wages do not have to provide this notice. A preliminary notice is not a lien against your property. Its purpose is to notify you of

persons that may have the right to file a lien against your property if they are not paid.

All chemically treated areas and newly installed wood members completed by this company are warranted for one year from the date of completion. Exceptions are areas treated as secondary control of wood destroying pests. Resetting of toilets and sealing of vinyl seams or shower doors and re-grouting which is warranted for thirty days. Final coat painting and wall papering is excluded, and should be contracted for separately by the parties of interest.

IF AND/OR WHEN A CERTIFICATION IS ISSUED THE FOLLOWING INFORMATION WILL APPLY
A certification applies to the visible and physically accessible area of the structure which were included in the inspection report. This certification specifically does not cover areas which were not inspected or were inaccessible at the time of inspection, and does not guarantee or imply in any way, that the structure will be free from future attack or damage, or from infestation or damage now existing in the inaccessible, or otherwise not inspected areas, which may become visibly accessible at a future date, or during remodeling or repair.

State law requires that you be given the following information (PESTICIDES ARE TOXIC CHEMICALS) Structural pest control operators are licensed and regulated by the Structural Pest Control Board, and apply pesticides which are approved for use in California, by the Department of Agriculture, and Environmental Protection Agency. Registration is granted when the state finds that based on existing scientific evidence there are no appreciable risks, if proper use conditions are followed or that the risks do not outweigh the benefits. The Degree of risk depends upon the degree of exposure, so exposure should be minimized.
If within 24 hours following application, you experience symptoms similar to common seasonal illness comparable to flu, contact your doctor or a poison control center at 800-876-4766, Chemtrec at 800-424-9300 and your pest control operator at 707-571-8177
This statement shall be modified to include any other symptoms or overexposure which is typical of influenza.
For further information contact any of the following: Schork Inspection Services Inc. 707-571-8177 Sonoma County Department of Agriculture 707-565-2371 Sonoma County Department of Environmental Health 707-565-4567 Marin County Department of Agriculture 415-473-6700 Marin County Environmental Health 415-499-3696 and or regulatory information the Structural Pest Control Board 916-561-8700 in Sacramento.

The following is a list of the possible Pesticides that may be used on your property, if Schork Inspection Services Inc. performs the structural pest control pesticide applications recommended in the report.

Premise Foam / Premise 75 / Premise Granules / Premise Gel. For Termite control.
Active ingredient: Imidacloprid .05% 1-[(6-cloro-3-pyridinyl)methyl]-N-nitro2-imidazolidinimine

Termidor Liquid/ Termidor Foam 0.005% Termidor dry, For termite control. Active ingredient: Fipronil .05% 5-amino-1-(2,6 dichloro-4-(trifluoromethyl)phenyl)-4-(1,R,S)-Trifluoromethyl) sulfinyl)-1-H-Pyrazole-3-carbonitrile

Timbor. For fungus and termite control. Active ingredient: Disodium Octaborate Tetrahydrate 10%

D-Force HPX15. For control of termites, beetles, and carpenter bee. Active Ingredient: Deltamethrin .06%

Altriset. For termite control. Active Ingredient: Chlorantraniliprole 18.4%

FastOut CS Foam. For control of termites, beetles, and carpenter bee. Active Ingredient: Cyfluthrin O.1%

XT-2000 Orange Oil Plus. For control of Drywood termites. Active Ingredient: d-Limonene 95%

Alpine Foam. For termite and ant control. Active Ingredient: Dinotefuran,-N-methyl-N'-nitro-N-(tetrahydro-3-furanyl)methyl)guanidine .025%

A separated report has been requested. It is defined as a Section One, or Section Two conditions evident on the date of inspection.

SECTION ONE Contains items where there is evidence of active infestation or infection that has resulted in or from infestation.

SECTION TWO Contains items deemed likely to lead to infestation, but where no visible evidence of such was found.

FURTHER INSPECTION Contains recommendations to inspect areas which during the original inspection did not allow the inspector access to complete his/her inspection, and cannot be defined as Section One, but may be defined as Section Two.

EXTERIOR:

1A. FINDING Fungus damage noted to outer roof fascia trim.
RECOMMENDATION Parties of interest should consult with a roofing specialist regarding repair of this area. Remove damaged wood members and replace with new materials.
(SECTION I ITEM)

1B. FINDING Fungus damage noted to exterior verge rafter area.
RECOMMENDATION Parties of interest should consult with a roofing contractor regarding repair of this area. Remove damaged wood members and replace with new materials.
(SECTION I ITEM)

1C. FINDING Evidence of carpenter bees noted on the exterior.
RECOMMENDATION Treat these areas with a registered pesticide for the control of carpenter bees.
(SECTION I ITEM)

1D. FINDING Fungus damage noted to exterior trellis area wood members.
RECOMMENDATION Remove damaged wood members and replace with new materials.
(SECTION I ITEM)

1E. FINDING Fungus damage noted to exterior trellis beam area wood members.
RECOMMENDATION Remove damaged wood members and replace with new materials. (SECTION I ITEM)

1F. FINDING Fungus damage noted to exterior siding. Some siding patterns are no longer in production. substitutions that do not match the existing siding patterns may have to be used.
RECOMMENDATION Remove damage wood members and replace with new materials using available siding patterns and configurations. (SECTION I ITEM)

WOOD DESTROYING PESTS AND ORGANISMS INSPECTION REPORT

Building No.	Street	City	Zip	Date of Inspection	Report #	Page
121	**Mary Paige Lane**	**Santa Rosa**	**95404**	**03/27/18**	**121marypai**	**7 of 10**

1G. FINDING Fungus damage noted to exterior siding at vent opening. Some siding patterns are no longer in production. substitutions that do not match the existing siding patterns may have to be used.
RECOMMENDATION Remove damage wood members and replace with new materials using available siding patterns and configurations. (SECTION I ITEM)

1H. FINDING Fungus damage noted to exterior trim, and possibly wood members under the trim.
RECOMMENDATION Remove damaged wood members and replace with new materials. (SECTION I ITEM)

1I. FINDING Random areas of fungus damage noted to portions of the front decking, and framing.
RECMMMENDATION Remove damaged wood members and replace with new materials as necessary at a time and materials basis only, including any areas adjacent to the main structure, or attachments to the structure. Scrape off fungus growth and treat the wood members with a registered fungicide for control of fungus. Areas marked on the diagram are general in nature to the deck and not specific to any one member. Parties of interest undertaking repairs should inspect the deck to determine all areas of repair, replacement, and or reinforcing. Decking areas are in an exterior location where there is no control over annual moisture intrusion. Regular maintenance repair and replacement of structural members will be required to maintain the integrity of the decking system, and extend the decks utility value. (SECTION I ITEM)

1J. FINDING Some fungus infestation was noted to wood members on the underside of the deck.
RECOMMENDATION Wire brush/scrape off fungus growth and treat wood members with a fungicide for control of fungus. (SECTION I ITEM)

1K. FINDING Fungus damage noted to decking girders joists, blocking and framing of the older deck framing.
RECOMMENDATION Remove Trex decking, remove damaged wood members and replace with new materials. (FURTHER INSPECTION ITEM)

1L. FINDING Fungus damage noted to outer deck fascia trim.
RECOMMENDATION Parties of interest should consult with a roofing specialist regarding repair of this area. Remove damaged wood members and replace with new materials. (SECTION I ITEM)

1M. FINDING Some earth to wood contacts were noted around decking wood members.
RECOMMENDATION Home maintenance should include eliminating earth to wood contacts where possible. (SECTION II ITEM)

1N. FINDING Swollen wavy siding noted on the exterior of the structure.
RECOMMENDATION Parties of interest should consult with a siding specialist regarding this type of siding and related conditions with regard to maintenance, repair and/or replacement. (SECTION II ITEM)

1O. FINDING Open siding seams are conducive to infestation.
RECOMMENDATION Building maintenance should include sealing open siding seams. (SECTION II ITEM)

1P. FINDING Leaks were noted in the exterior gutter system.
RECOMMENDATION Parties of interest should consult with a specialist regarding this condition. (SECTION II ITEM)

1Q. FINDING Moss growth noted on the roofing system.

RECOMMENDATION parties of interest should consult with a roofing specialist regarding the roof condition and removal of moss growth.
(SECTION II ITEM)

1R. FINDING Some newer retro-fit windows have been installed by others. No Guarantee is expressed or implied on work performed by others.
RECOMMENDATION Parties of interest should consult with the window installation company regarding any questions, concerns, and guarantees, about the window installation.
(FURTHER INSPECTION ITEM)

1S. FINDING Bird damage noted in the gable area.
RECOMMENDATION Parties of interest should consult with a bird specialist regarding this issue.
Remove damaged areas and replace with new materials as a part of building maintenance.
(FURTHER INSPECTION ITEM)

1T. FINDING Cracks were noted in the foundation of the structure. Wood destroying pests can enter the structure through these cracks.
RECOMMENDATION Parties of interest should consult with a foundation specialist regarding this condition. Periodic inspection is recommended.
(FURTHER INSPECTION ITEM)

1U. FINDING Meter box is painted shut and inaccessible for inspection.
RECOMMENDATION Perform further inspection of the inaccessible area after the areas have been made accessible for inspection. File a report with findings and recommendations.

1W. FINDING Earth to wood contact to decking girder, and form lumber in the subarea under the front deck.
RECOMMENDATION Remove form lumber, correct earth to wood contacts, repair girder as necessary and replace with new materials.
(SECTION I ITEM)

1X. FINDING The underside of the back deck was inaccessible for inspection because of jammed access panel. Fungus damage noted from small opening at side of the deck to joisting and framing.
RECOMMENDATION Perform further inspection of the inaccessible area after the areas have been made accessible for inspection. File a report with findings and recommendations. (FURTHER INSPECTION ITEM)

GARAGE:
2A. FINDING Fungus damage noted to the base of the garage door jambs.
RECOMMENDATION Cut off base of jambs and fill voids with concrete.
(SECTION I ITEM)

2B. FINDING Storage of personal items in the garage restricts access for inspection of this area.
RECOMMENDATION If requested in writing perform further inspection of this area after all storage has been removed.
(FURTHER INSPECTION ITEM)

INTERIOR:
3A. FINDING Stains were noted on the interior ceiling from possible roof leaks.

RECOMMENDATION Parties of interest should consult with a specialist regarding this condition.
(FURTHER INSPECTION ITEM)

3B. FINDING The master bath stall shower was water tested and no leaks became apparent in the shower pan at the time of inspection.

3C. FINDING Tile floors in the interior of the structure restrict access for inspection. (FURTHER INSPECTION ITEM)

3D. FINDING Cracked floor tiles noted in the hall bath and hallway area.
RECOMMENDATION Parties of interest should contact a tile specialist regarding this issue. (FURTHER INSPECTION ITEM)

3E. FINDING Stains were noted under the kitchen sink at the time of inspection.
RECOMMENDATION periodic inspection of this area is recommended. (FURTHER INSPECTION ITEM)

3F. FINDING Loose toilet was noted in the hall bathroom.
RECOMMENDATON Building maintenance should include tightening the toilet. (SECTION II ITEM)

3G. FINDING Cracks were noted to interior sheetrock.
RECOMMENDATION Parties of interest should consult with a sheetrock specialist regarding repair to these areas.

3H. FINDING Stains were noted on the interior master bedroom ceiling from possible plumbing leak.
RECOMMENDATION Parties of interest should consult with a specialist regarding this condition. (FURTHER INSPECTION ITEM)

SUBSTRUCTURE AREA:
4A. FINDING The subarea was fully insulated at the time of inspection. Insulation in this area restricts and prohibits visual access to subarea framing. Removal and replacement of insulation is not within the scope of this inspection.
RECOMMENDATION Perform further inspection, if requested in writing, of the areas after all insulation has been removed for full access. (FURTHER INSPECTION ITEM)

4B. FINDING An active plumbing leaks was noted in the subarea to a ABS pipe joint or fitting.
RECOMMENDATION Parties of interest should contact a plumbing contractor for repair of this condition. (SECTION II ITEM)

4C. FINDING No access to subarea section between garage and main structure.
RECOMMENDATION Perform further inspection of these areas after they have been opened for complete access and inspection. (FURTHER INSPECTION ITEM)

4D. FINDING Some evidence of moisture condensation was noted on subarea foundation , and is conducive to infestation.
RECOMMENDATION Parties of interest should consult with a Mechanical fan ventilation system specialist with regard to this issue, and any corrective measures.
(SECTION II ITEM)

A wood destroying organisms inspection report does not include inspection for rodents, and or other wildlife pests, which is a general pest control issue
RECOMMENDATION Parties of interest should consult with a general pest company regarding this issue and any corrective measures.

WOOD DESTROYING PESTS AND ORGANISMS INSPECTION REPORT

Building No.	Street	City	Zip	Date of Inspection	Report #	Page
121	**Mary Paige Lane**	**Santa Rosa**	**95404**	**03/27/18**	**121marypai**	**10 of 10**

ATTIC SPACES:

5A. FINDING Stains were noted in the attic areas from possible roof leaks.
RECOMMENDATION Parties of interest should consult with a roofing specialist regarding the integrity of the roof. (FURTHER INSPECTION ITEM)

5B. FINDING The attic area above the living area was semi accessible for inspection because of loose type insulation, and was inspected from the access opening only.
RECOMMENDATION Perform further inspection, if requested in writing of the area after all insulation has been removed, adequate cat walk type support has been installed, and a damage waiver signed.
(FURTHER INSPECTION ITEM)

5C. A wood destroying Organisms inspection does not include inspection for rodents, which is a General Pest control issue.
RECOMMENDATION Parties of interest should consult with a general pest control professional who specializes in this type of infestation and control.

MIKE TREINEN, REHS
ONSITE WASTEWATER CONSULTANT
4910 HAYFIELD CT.
SANTA ROSA CA 95404-9550
707-526-0872
treinen@sonic.net

March 25, 2018

David Phillips, Owner
Mary Haufler, Realtor, Sotheby's

Subject: Findings report in regard to an evaluation of the onsite wastewater treatment system at **121 Mary Paige, Santa Rosa** on March 23, 2018.

Permit History
Sonoma County PRMD Well and Septic Division septic system records were requested and reviewed. A 1996 septic system permit supporting a four bedroom home was located which indicates a 1500 gallon primary septic tank, 1200 gallon sump tank and pump and 310 feet of (equally distributed) leach line installed at 60 inches deep with 24 inches of rock below the pipe. The County documents I am forwarding are to be considered a part of this report and may be requested by the County for any remodel applications.

Septic Tank
1. There is a concrete, two-compartment 1500 gallon septic tank and 1200 gallon sump tank, pump and control panel adjacent to the home. Both tanks were pumped at the time of my inspection by Vineyard Septic Service (477-0556).
2. The tanks, risers, inlet baffle and effluent filter are in good condition. There is minor root intrusion at the base of the primary tank risers.
3. The pump, pump float and high water alarm float are working. The pump and high water alarm test switches on the control panel are working. The dose counter is functional (for historical purposes, the reading was 5115 at the beginning of the inspection).
4. The primary tank lid gaskets are deteriorated which may lead to occasional odors.

Dispersal System / Leach Field
5. When the pump discharges, all of the leach lines receive water under pressure at the same time (equal distribution). A system load test of approximately 200 gallons was done through the sump tank into the leach field. The test was acceptable. No problems or stress were noted in the leach field area following the test. The house is occupied at this time.

Potential System Replacement Areas
6. There is designated area for 200% reserve area.

System Evaluation
7. The system appears to be working at this time and its past use suggests it is functionally sized and should have reasonable remaining lifespan. At this time, it is my opinion that the system could be rated code compliant in terms of future remodeling. This report is valid for five years for remodeling purposes.

Recommendations / Comments

A. Replace the primary tank lids - lids are about $80 at Selvage Concrete Products or Pace Supply.

B. Replace the control panel backboard - minimal cost of wood.

C. Dig down, cut roots at the primary tank riser bases, remove old grout and re-grout with high quality nonshrink grout. The pumpers routinely do this - estimated $300-400.

D. Hose off the plastic effluent filter annually.

E. Normally there is a vent hole (~3/16 inch) in the pump line between the pump and the backflow valve to help avoid air lock. It appears that the system has been working OK for 20 years and perhaps such a hole is unnecessary. Just keep this in mind if there ever does appear to be an air lock problem.

F. Regular pumping is important to the long-term health of the systems. With full time occupancy by 2-4 people, it is recommended that the septic tanks be pumped regularly every 5-7 years as a starting point. This time interval may be increased or decreased if use is heavier or lighter than described or as recommended by the pumping service company. Sewage flow can be substantially reduced, and system lifespan extended, through the use of low flow toilets, showerheads and dishwashers, as well as faucet aerators and a front loading or high efficiency top loading laundry machine. Liquid detergent is suggested. If biocidal pharmaceuticals are used long term by the occupants, the septic tank will need more frequent pumping. Note septic tank additives are generally not needed for proper septic system function.

G. Food-related grease and oils should be placed in cans or jars and disposed of in the home's solid waste container and not drained into the septic tank as it can lead to premature clogging of the effluent filter and leach field lines.

H. Note that a *laundry-only* subsurface graywater system may be installed without permits; however, there are specific standards which I could discuss with you if there is interest.

No warranty or guaranty is given or implied regarding the future function of the system.

Should you need further information regarding this report, please contact me at 707-526-0872.

Respectfully,

Mike Treinen

Mike Treinen,
California Registered Environmental Health Specialist # 3826

PERMIT & RESOURCE MANAGEMENT DEPARTMENT
WELL & SEPTIC SECTION
2550 VENTURA AVENUE, SANTA ROSA, CA 95403 TELEPHONE (707) 527-1900

☒ **APPLICATION FOR PRIVATE SEWAGE DISPOSAL PERMIT**

☐ **APPLICATION FOR PUBLIC HEALTH CLEARANCE FOR:** Standard

Application is hereby made to the Sonoma County Health Officer for a permit to construct or repair a sewage disposal system as described below in compliance with the code of Sonoma County or for clearance for other construction.

This permit application must be signed on all 3 signature lines by the **same** person (i.e., contractor or owner/builder). A letter of authorization from owner must accompany this application if agent is signing on owner's behalf.

APPLICANT: PLEASE PRESS HARD (USE BLACK INK). FILL IN BETWEEN HEAVY LINES ONLY AND SEE REVERSE SIDE FOR INSTRUCTIONS.

BLDG. PERMIT NO.	SDS PERMIT NO.	DATE ISSUED	CLEARANCE	NEW	REPAIR
A	SEP96-1493	11-25-96		(NEW)	

JOB ADDRESS 121 MARY-Paige LN
NEAREST CROSS STREET SONOMA MTN RD
ASSESSOR'S PARCEL NO. 49-020-29 LOT 4
SUBDIVISION _____ LOT 4 BLK. _____
CITY SANTA ROSA STATE CA ZIP 95404

SEWAGE DISPOSAL SYSTEM CONTRACTOR OWNER
ADDRESS _____ TEL. NO. _____
GENERAL CONTRACTOR _____

OWNER'S NAME DAVID PHILLIPS
MAILING ADDRESS 121 MARY-PAIGE [redacted] LN.
CITY SANTA ROSA STATE CA ZIP 95404 PHONE NUMBER 523-9621

INSTALLATION WILL SERVE:
RESIDENCE ☒ APARTMENT HOUSE ☐ COMMERCIAL ☐ MOBILE HOME ☐
MOTEL ☐ OTHER ☐ BUILDING CONST. NEW ☒ ADDN/ALTER ☐

NO. OF UNITS: 1 TOTAL NO. OF BEDROOMS: 4 WATER SUPPLY: PUBLIC ☒ PRIVATE ☐ LOT SIZE: 40 Ac. ±

TERMS OF PERMIT

APPLICANT AGREES THAT:
1. HEALTH DEPARTMENT ENVIRONMENTAL HEALTH SPECIALIST WILL BE NOTIFIED A MINIMUM OF 24 HOURS PRIOR TO COMMENCING WORK.
2. HEALTH DEPARTMENT ENVIRONMENTAL HEALTH SPECIALIST AND ENGINEER'S OR CONSULTING ENVIRONMENTAL HEALTH SPECIALIST'S INSPECTION, WHEN INDICATED, WILL BE OBTAINED PRIOR TO COVERING THE SYSTEM.
3. THE JOB CARD AND A COPY OF THE APPROVED SEWAGE DISPOSAL SYSTEM DESIGN SHALL BE AVAILABLE AT THE JOB SITE AT ALL TIMES.
4. ANY DEVIATION FROM APPROVED PLAN WITHOUT PRIOR APPROVAL OF THE HEALTH OFFICER WILL BE CAUSE FOR STOPPING WORK UNTIL THE CHANGES ARE FULLY JUSTIFIED AND APPROVED.
5. THE SEPTIC TANK MUST BE I.A.P.M.O. APPROVED.
6. PRIOR TO AUTHORIZING OCCUPANCY OF ANY BUILDING WITH AN ENGINEER OR CONSULTING ENVIRONMENTAL HEALTH SPECIALIST DESIGNED SYSTEM, A SIGNED STATEMENT BY THE DESIGNER CERTIFYING THAT THE SYSTEM WAS INSTALLED IN COMPLIANCE WITH THE APPROVED PLAN MUST BE SUBMITTED TO THE PUBLIC HEALTH OFFICER.
7. THIS PERMIT IS SUBJECT TO REVOCATION IF FOUND TO BE IN NONCONFORMANCE WITH SONOMA COUNTY CODE OR STANDARDS OF THE PUBLIC HEALTH DEPARTMENT.
8. THIS PERMIT IS NOT TRANSFERABLE.

IT IS UNDERSTOOD THAT THE ISSUANCE OF A PERMIT IN NO WAY INDICATES THAT A GUARANTEE OF PERFECT AND INDEFINITE OPERATION OF THIS SYSTEM IS MADE BY THE COUNTY OF SONOMA PUBLIC HEALTH DEPARTMENT AND THAT THE OWNER IS REQUIRED TO MAKE ANY REPAIRS NECESSARY TO CONFINE SEWAGE BELOW THE SURFACE OF THE GROUND. APPROVAL IS BASED UPON INFORMATION SUBMITTED BY THE APPLICANT. FIELD CONDITIONS AT VARIANCE WITH APPLICATION MAY VOID PERMIT.

I HEREBY ACKNOWLEDGE THAT I HAVE READ THIS APPLICATION AND THE INSTRUCTIONS ON THE REVERSE SIDE AND STATE THAT THE ABOVE IS CORRECT AND AGREE TO COMPLY WITH ALL COUNTY ORDINANCES AND STATE LAWS REGULATING CONSTRUCTION OF PRIVATE SEWAGE DISPOSAL SYSTEMS. THIS PERMIT SHALL EXPIRE BY LIMITATION IF WORK AUTHORIZED IS NOT COMMENCED WITHIN 180 DAYS.

X _____
SIGNATURE OF APPLICANT

The undersigned applicant for private sewage disposal permit certifies as follows:

CONTRACTOR'S LICENSE LAW CERTIFICATE

☐ (COMPLETE EITHER A OR B)
A. THE APPLICANT IS LICENSED UNDER THE PROVISIONS OF THE CONTRACTORS LICENSE LAW UNDER LICENSE NUMBER _____ WHICH LICENSE IS IN FULL FORCE AND EFFECT.

☒ B. THE APPLICANT IS EXEMPT FROM THE PROVISIONS OF THE CONTRACTORS LICENSE LAW FOR THE FOLLOWING REASON:
1) OWNER/BUILDER ☒
2) OTHER (EXPLAIN) ☐

10/24/96 DATE X _____ APPLICANT

WORKMEN'S COMPENSATION CERTIFICATE

(One or Two must be completed)
☐ 1. A currently effective certificate of Workmen's Compensation Insurance coverage is on file with the Sonoma County Public Health Department.
Compensation Insurance _____ Policy # 010437 10-28-96801
Is currently in force.

☒ 2. I certify that in the performance of the work for which this permit is issued I shall not employ any person in any manner so as to become subject to the workmen's compensation laws of California.

X _____ APPLICANT

SONOMA COUNTY PERMIT AND RESOURCE MANAGEMENT DEPARTMENT REVIEWED BY _____ DATE 11/22/96
WHEN APPROVED THIS IS YOUR PERMIT
WELL AND SEPTIC SECTION

LAYOUT PLAN APPROVED BY _____ DATE 11/22/96
CONSTRUCTION APPROVED BY _____ DATE 10/28/96

LU0008 (Rev. 11/94) Site ID Number _____

#1961431
1636.00
***TTL 1636.00
CHECK 1636.00

DIST: WHITE - ORIG. - HEALTH DEPT. / 2) HEALTH DEPT. / 3) PERMITTEE / 4) BLDG. INSP. DEPT. / 5) BLDG. INSP. DEPT.

NOT TRANSFERABLE

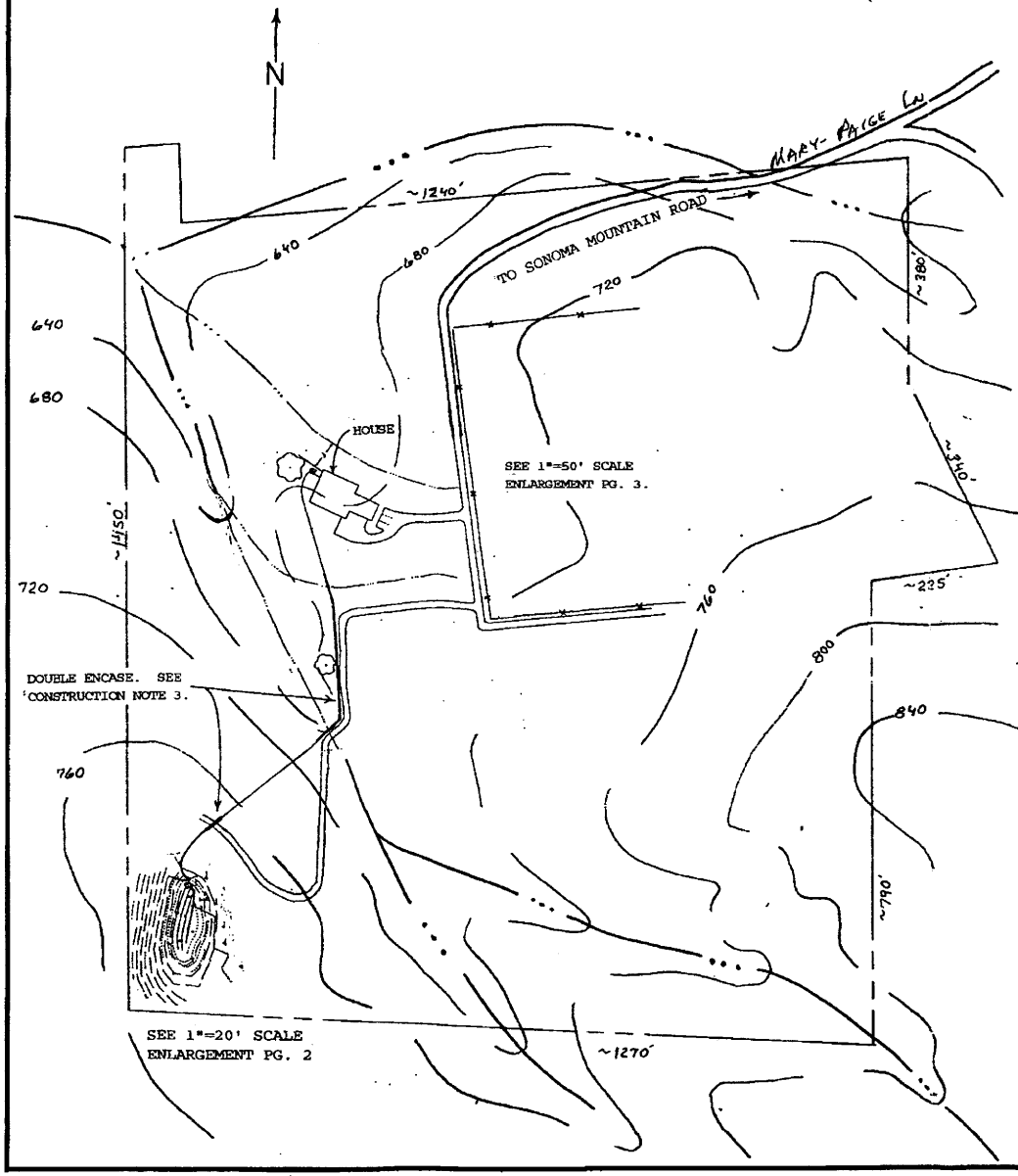

NOTICE

NOTIFY SANITARIAN BEFORE COVERING WORK AND SEE TERM 6 ON FACE OF PERMIT

NOTICE

WATERTIGHTNESS TEST REQUIRED AT SEPTIC TANK AND SUMP AT TIME OF CONSTRUCTION INSPECTION.

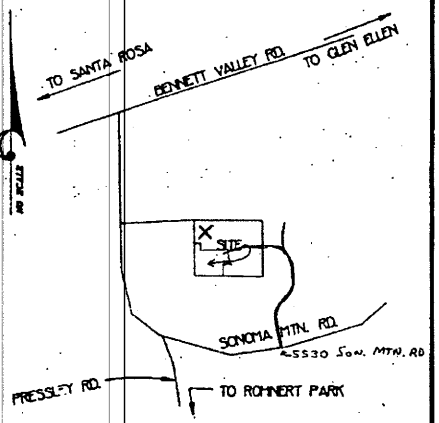

VICINITY MAP

REGISTERED ENVIRONMENTAL HEALTH SPECIALIST
DAVID A. DOHT
#4088
EXP. 12-31-96
SONOMA COUNTY
STATE OF CALIFORNIA
PERMIT AND RESOURCE MANAGEMENT DEPARTMENT
REVIEWED BY
11/22/96
DATE
WELL AND SEPTIC SECTION

TANK SIZE 1500/1200
LEACH TRENCH
LENGTH 310LF WIDTH 18-24"
DEPTH 60" ROCK 24"
NO. OF BEDROOMS 4

Advantage Consulting
301 Jensen Ln. • Windsor, CA 95492 • 707/838-3939 • 800/303-3939

SCALE: 1"=200'	APPROVED BY:	DRAWN BY DOHT
DATE: 3-4-96		REVISED 10-25-96

121 MARY-PAIGE LANE

A.P.# 49-020-29 LOT 4 — DRAWING NUMBER

11 X 17 PRINTED ON NO. 1000H CLEARPRINT

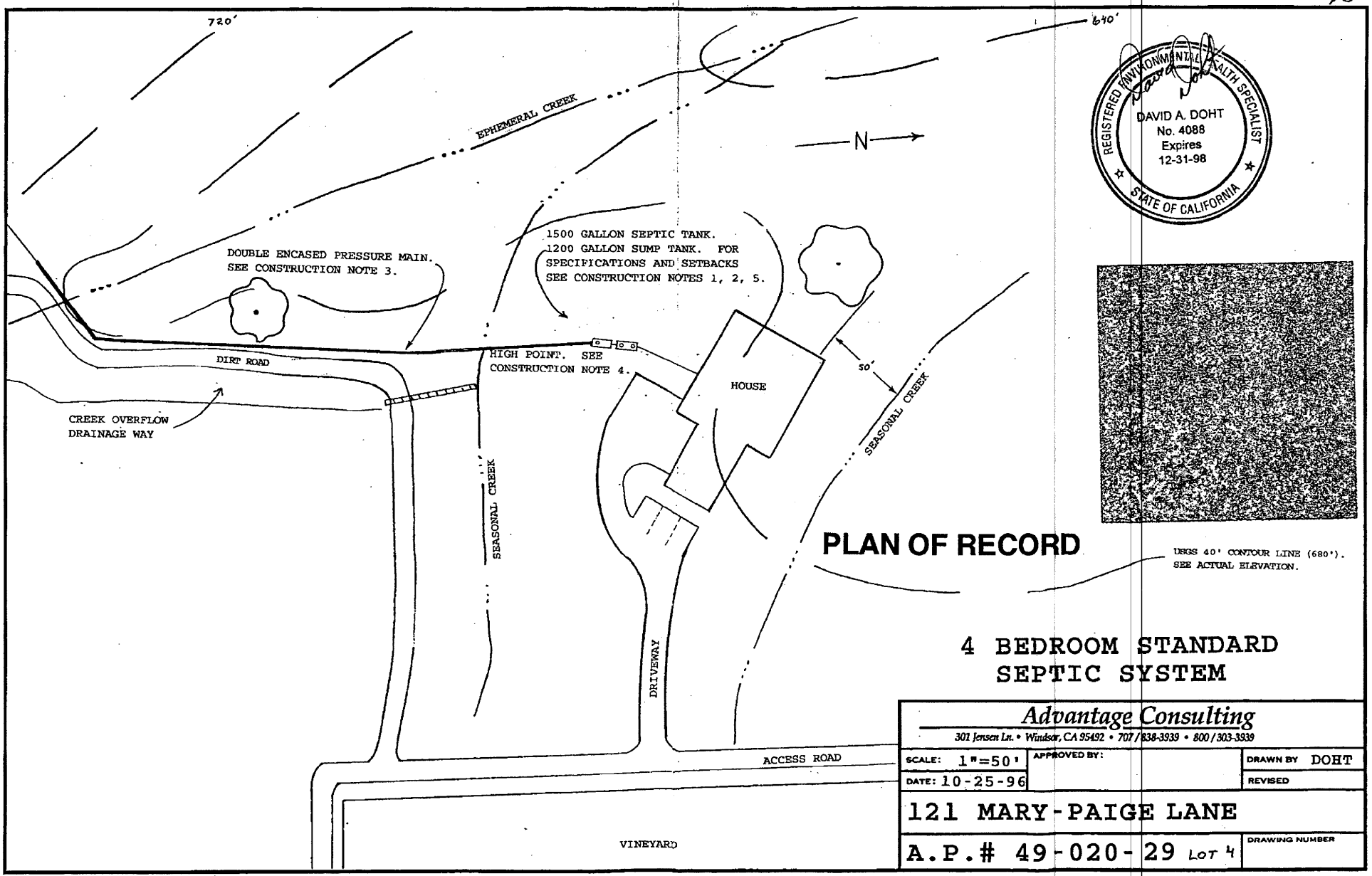

REGISTERED ENVIRONMENTAL HEALTH SPECIALIST
DAVID A. DOHT
No. 4088
Expires
12-31-98
STATE OF CALIFORNIA

PLAN OF RECORD

4 BEDROOM STANDARD SEPTIC SYSTEM

Advantage Consulting
301 Jensen Ln. • Windsor, CA 95492 • 707/838-3939 • 800/303-3939

SCALE: 1"=50'	APPROVED BY:	DRAWN BY DOHT
DATE: 10-25-96		REVISED

121 MARY-PAIGE LANE

A.P.# 49-020-29 LOT 4 | DRAWING NUMBER

11 X 17 PRINTED ON NO. 1000H CLEARPRINT ●

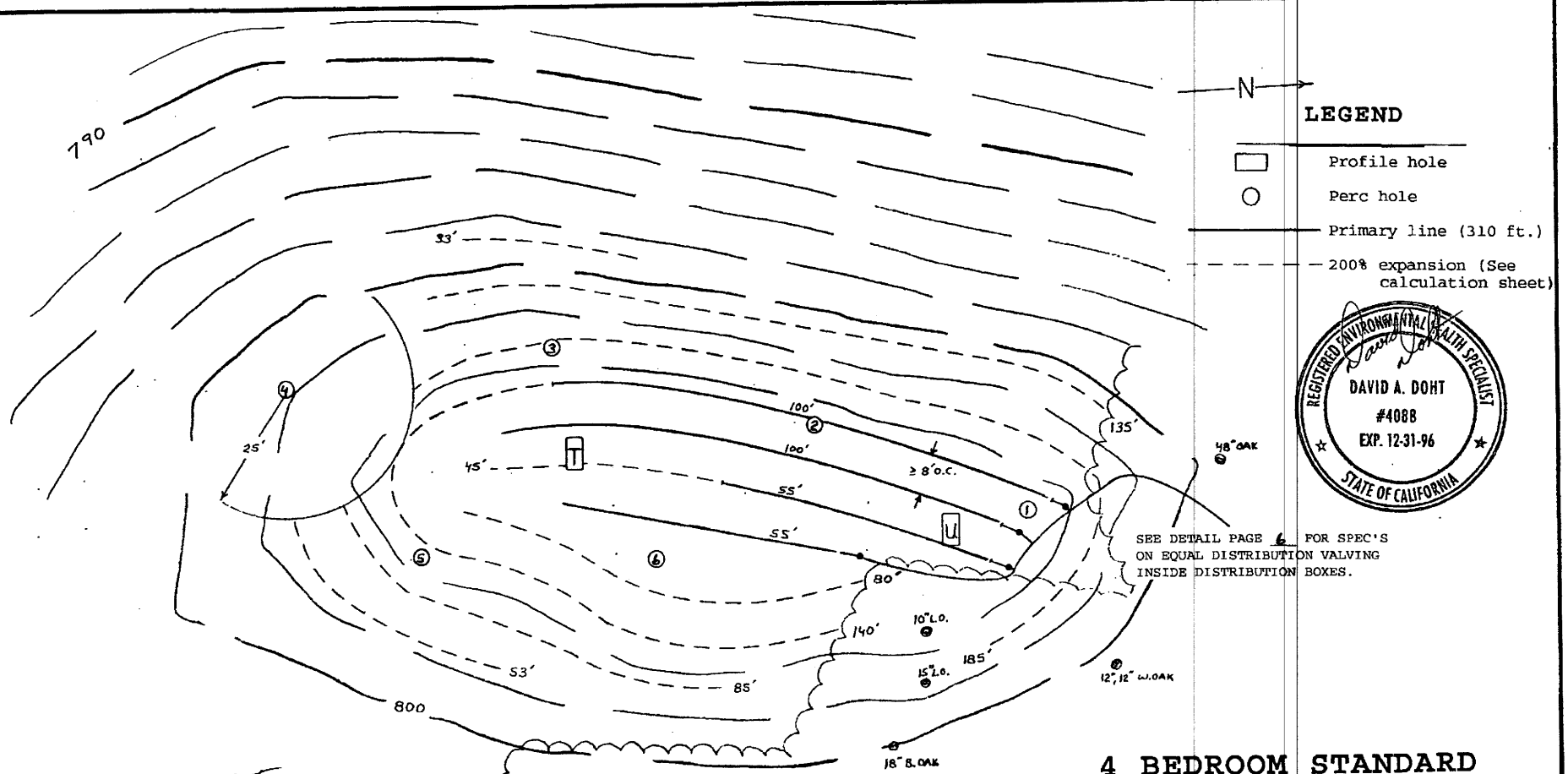

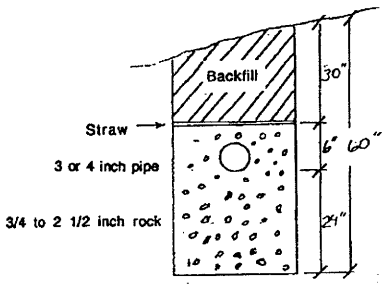

LEACH LINE DETAIL

11 X 17 PRINTED ON NO. 1000H CLEARPRINT ©

REGISTERED ENVIRONMENTAL HEALTH SPECIALIST
DAVID A. DOHT
#4088
EXP. 12-31-96
STATE OF CALIFORNIA

ENVIRONMENTAL HEALTH SPECIALIST
GARY M. TREINEN
#3826
EXPIRES
12/31/98
STATE OF CALIFORNIA

4 BEDROOM STANDARD SEPTIC SYSTEM

Advantage Consulting
301 Jensen Ln. • Windsor, CA 95492 • 707/838-3939 • 800/303-3939

SCALE: 1"=20'	APPROVED BY:	DRAWN BY	DOHT
DATE: 3-4-96		REVISED	

121 MARY-PAIGE LANE

A.P.# 49-020-29 LOT 4 | DRAWING NUMBER

System Location.
MT 3/25/96

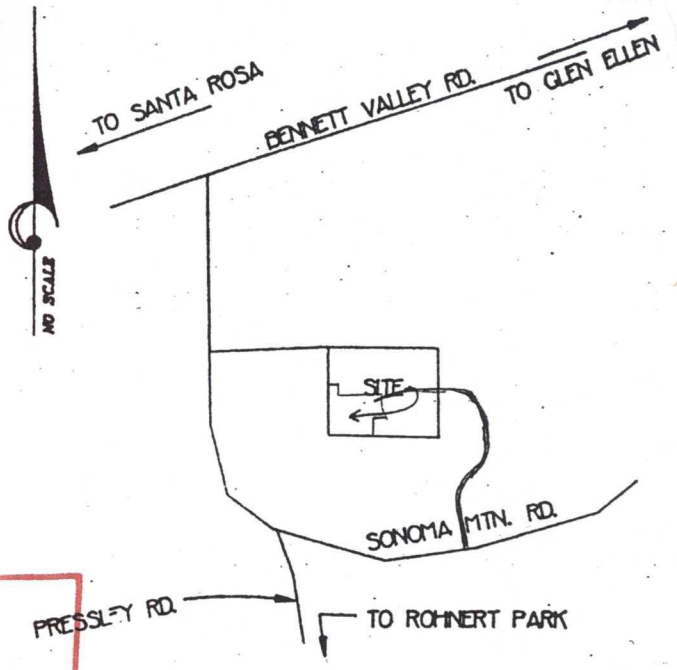

VICINITY MAP

PERMIT AND RESOURCE MANAGEMENT DEPARTMENT
WELL AND SEPTIC SECTION
VESTED
APPROVED Gwendolyn R Baer DATE 4/19/96

~330'

DESIGN FOR VESTING PURPOSES WILL, OF NECESSITY NEED TO BE ADAPTED TO THE FINAL CHOSEN LOCATION OF THE HOUSE.

REGISTERED ENVIRONMENTAL HEALTH SPECIALIST
DAVID A. DOHT
#4088
STATE OF CALIFORNIA

Advantage Consulting
301 Jensen Ln. • Windsor, CA 95492 • 707/838-3939 • 800/303-3939

SCALE: 1"=200'	APPROVED BY:	DRAWN BY DOHT
DATE: 3-4-96		REVISED

4560 SONOMA MTN. RD LOT 4

A.P.# 49-020-13

DRAWING NUMBER

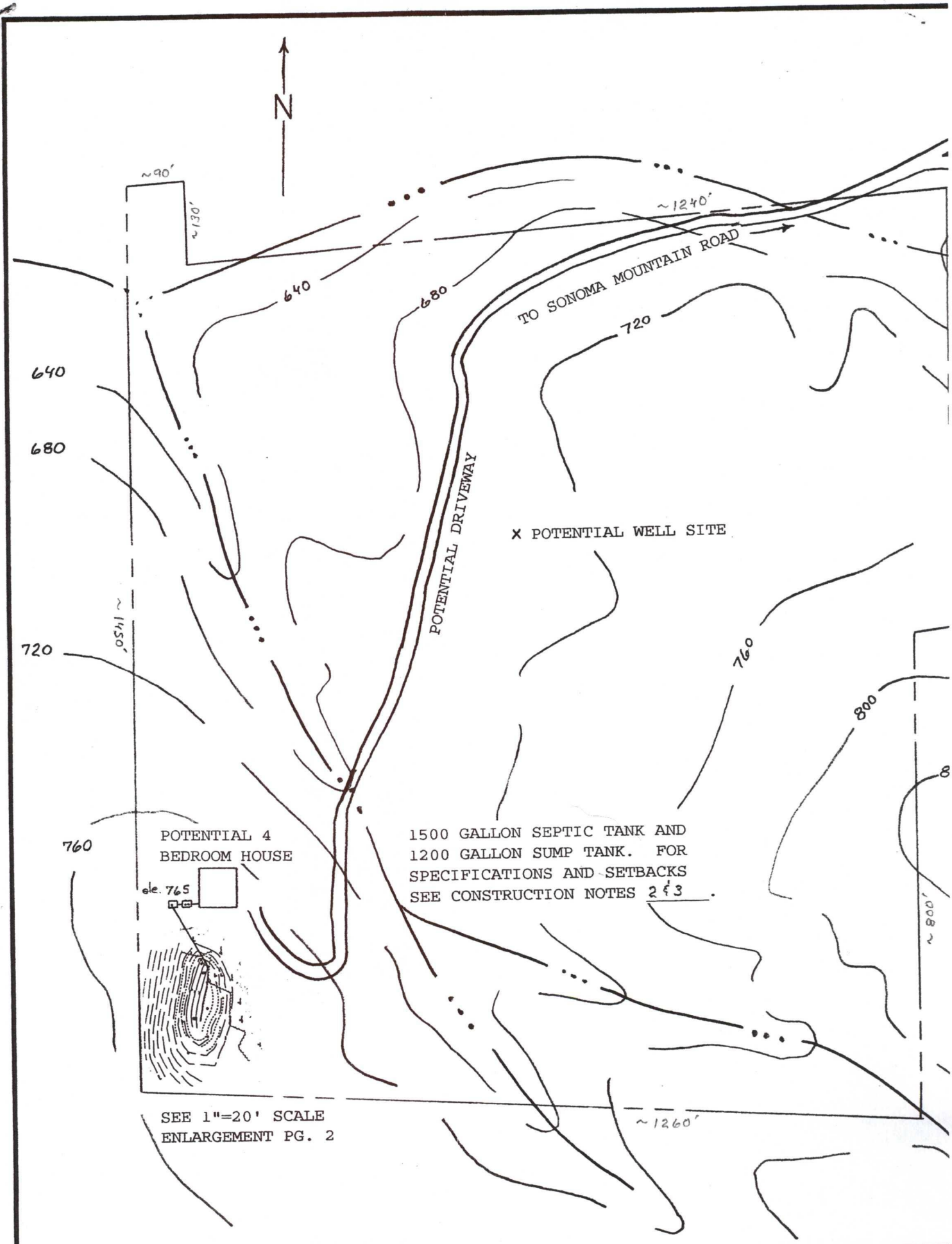

11 X 17 PRINTED ON NO. 1000H CLEARPRINT ●

VICINITY MAP

NOT TO SCALE

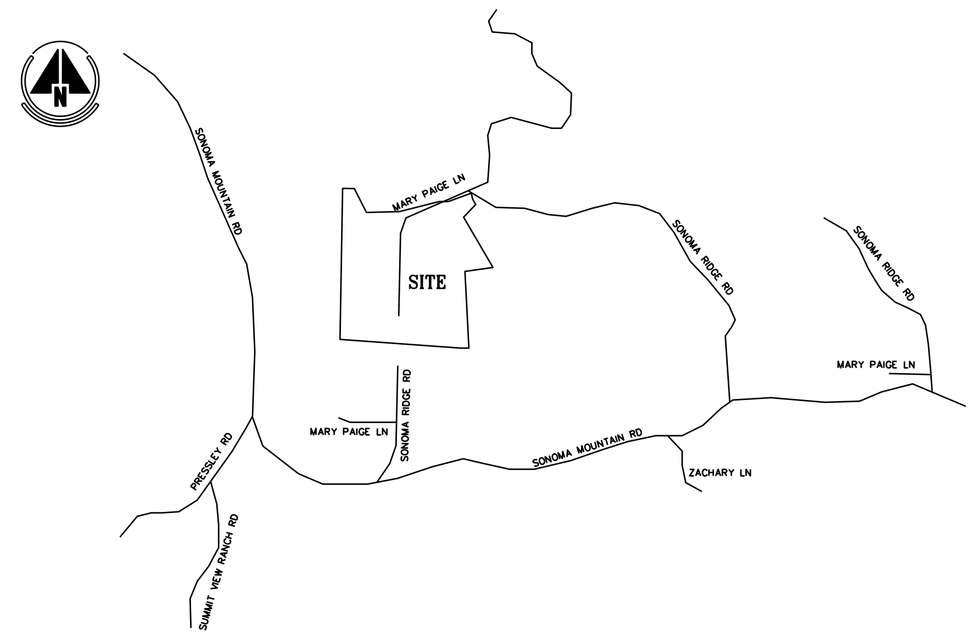

PROJECT

COVERED PORCH ADDITIONS
DECK EXTENSION
TRELLIS ADDITIONS

PROPERTY

PROJECT ADDRESS:
121 MARY PAIGE LANE, SANTA ROSA

A.P. NO: 049-020-029

ZONING: LIA B6 40/40-J-Z-SD

ACRES: 41.82

ADDITION AREAS

COVERD PORCH:		
FRONT	225	SQ FT
REAR	560	SQ FT
TRELLIS:		
@ OFFICE	125	SQ FT
@ MSTR BEDRM	820	SQ FT
@ REAR YARD	335	SQ FT
DECK:		
@ MSTR BEDRM	105	SQ FT

COLORS

BODY:
M.E

TRIM:
M.E.

ROOF:
M.E.

VERIFY WITH OWNER

CODES

THESE DESIGN DOCUMENTS HAVE BEEN PREPARED UNDER THE FOLLOWING CODES AND ORDINANCES:

2007 CALIF BUILDING CODE
2007 CALIF ELEC CODE
2007 CALIF PLUMB CODE
2007 CALIF MECH CODE

DEF. SUBMITTALS

UNDER THE PROVISION OF SECTION 106.3.4.2 OF THE UBC, SUBMITTAL OF THE FOLLOWING ITEMS SHALL BE DEFERRED:

NONE

SHEET INDEX

TITLE SHEET

T GENERAL PROJECT INFORMATION
VICINITY MAP

ARCHITECTURAL

A1 SITE PLAN
A2 ELEVATIONS
A2.1 ELEVATIONS
A3 FLOOR PLAN
INTERIOR ELEVATION
A4 ROOF PLAN
A5 SECTION
ARCHITECTURAL NOTES & DETAILS

STRUCTURAL

SN STRUCTURAL NOTES
S1.1 FOUNDATION PLAN
S1.2 ROOF FRMG PLAN
S1 STANDARD STRUCTURAL DETAILS
S2 STRUCTURAL DETAILS

ATTACHMENTS

STRUCTURAL ENGINEERING
CALCULATIONS

CONSULTANTS

STRUCTURAL ENG.

JOHNSON, DEBOIS & FORREST
405 WEST COLLEGE AVE. SUITE E
SANTA ROSA, CA
707-575-0911
JOB NO 09066

REVISIONS	BY

RICK KADELLO DESIGNER
PAUL LARSEN ARCHITECT

DESIGN FOR
DAVID & DALE PHILLIPS
121 MARY PAIGE LANE, SANTA ROSA

LICENSED ARCHITECT
PAUL RANDELL LARSEN
No. C21431
RNW 11-30-11
STATE OF CALIFORNIA

KADELLO & LARSEN
ARCHITECTURAL DESIGNS
9061 CONDE LANE, WINDSOR, CA (707) 838-2600

BY PRL
CHK PRL
DATE 9-24-09

SHEET
T

JOB 0920

PLOT PLAN

NO SCALE

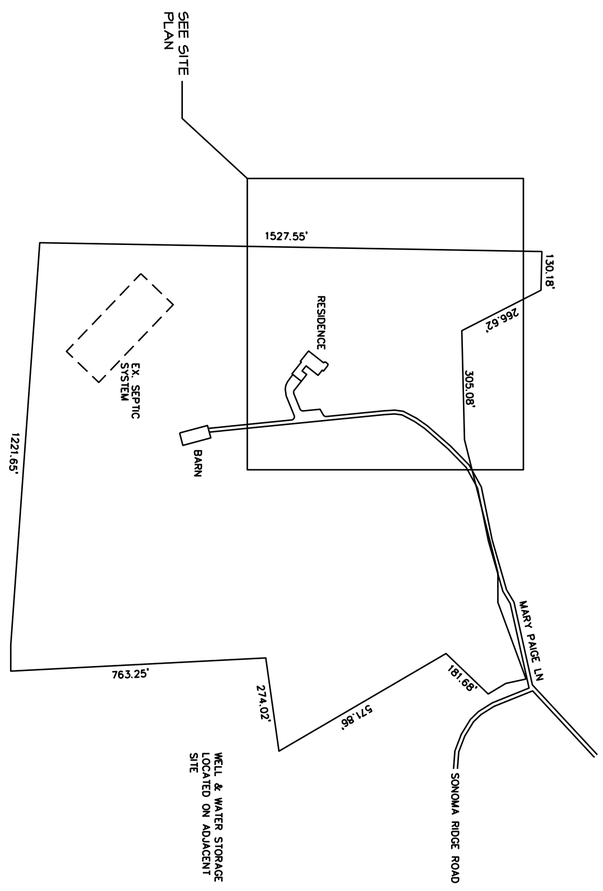

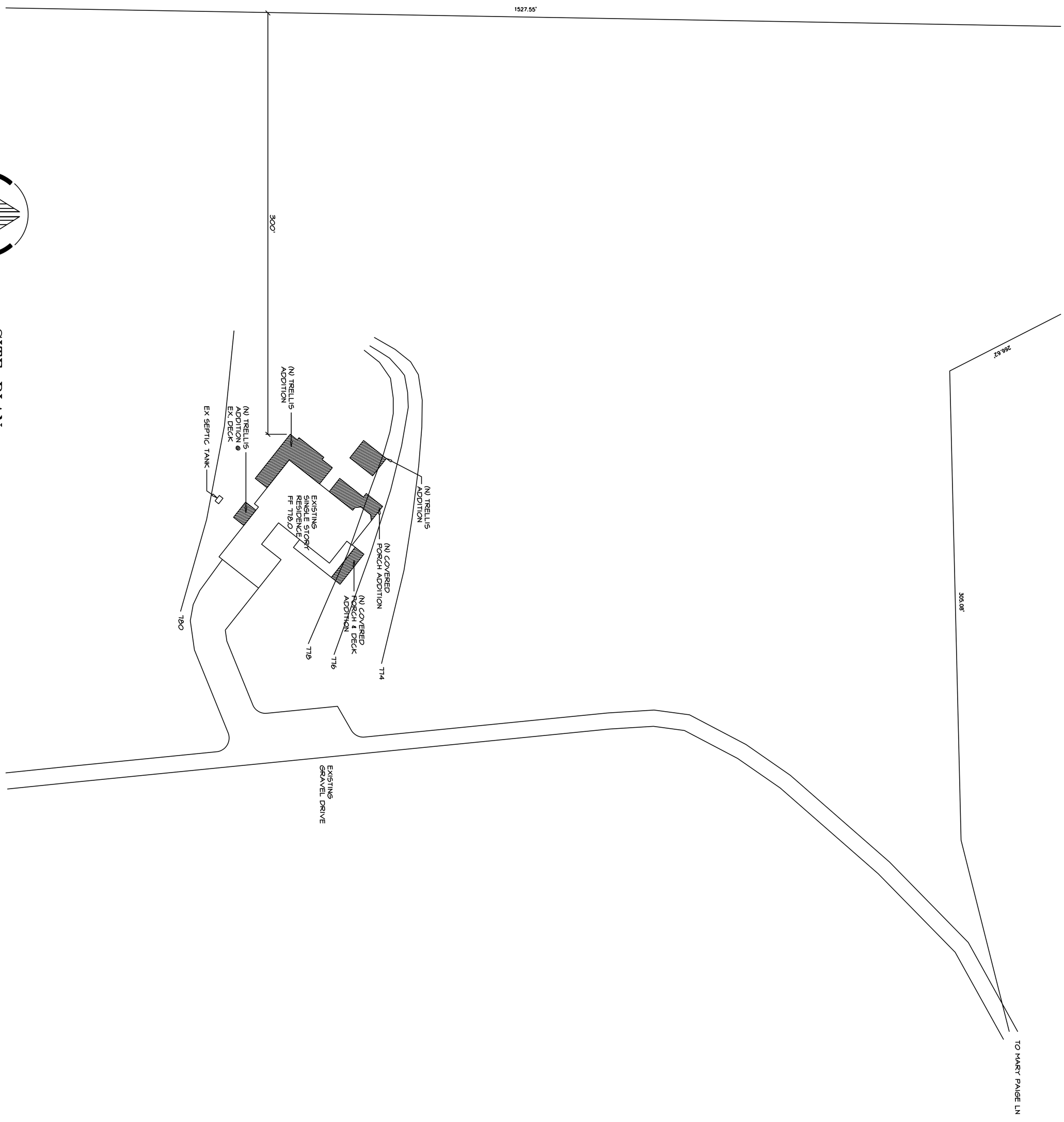

SITE PLAN

0 40' 80' 160'

SHEET A1

JOB 0920

DATE 9-24-09

CHK PRL

BY PRL

KADELLO & LARSEN
ARCHITECTURAL DESIGNS
9061 CONDE LANE, WINDSOR, CA (707) 838-2600

LICENSED ARCHITECT PAUL RANDELL LARSEN No. C21431 REN. 11-30-11 STATE OF CALIFORNIA

DESIGN FOR
DAVID & DALE PHILLIPS
121 MARY PAIGE LANE, SANTA ROSA

RICK KADELLO DESIGNER
PAUL LARSEN ARCHITECT

REVISIONS BY

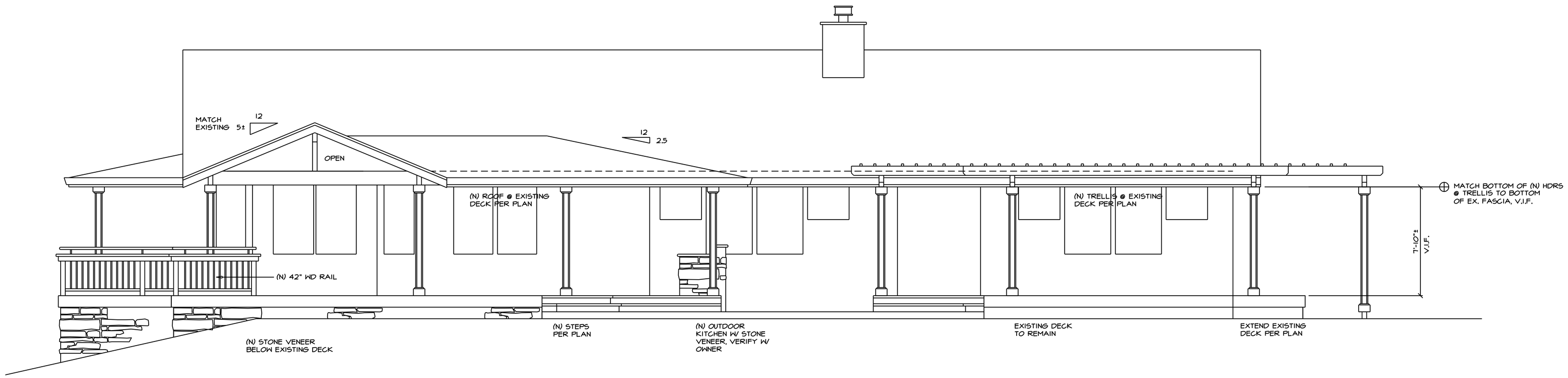

WEST ELEVATION

0 4' 8' 16'

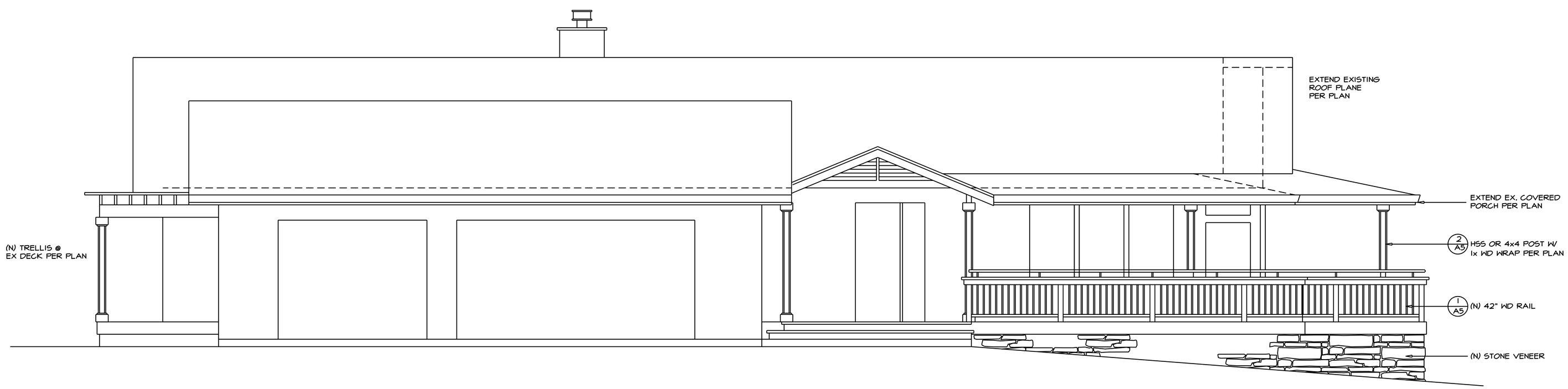

EAST ELEVATION

0 4' 8' 16'

REVISIONS	BY

RICK KADELLO DESIGNER
PAUL LARSEN ARCHITECT

DESIGN FOR
DAVID & DALE PHILLIPS
121 MARY PAIGE LANE, SANTA ROSA

LICENSED ARCHITECT
PAUL RANDELL LARSEN
No. C21431
REN. 11-30-11
STATE OF CALIFORNIA

KADELLO & LARSEN
ARCHITECTURAL DESIGNS
9061 CONDE LANE, WINDSOR, CA (707) 838-2600

BY	PRL
CHK	PRL
DATE	9-24-09

SHEET
A2

JOB 0920

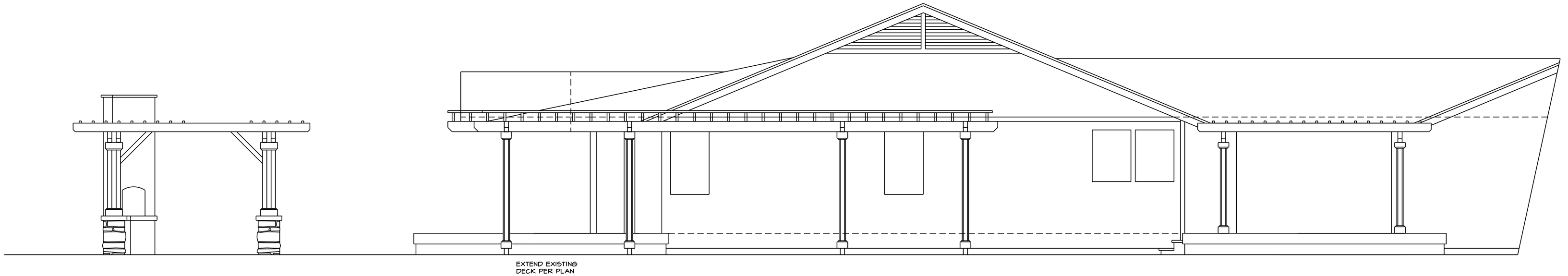

SOUTH ELEVATION

0 4' 8' 16'

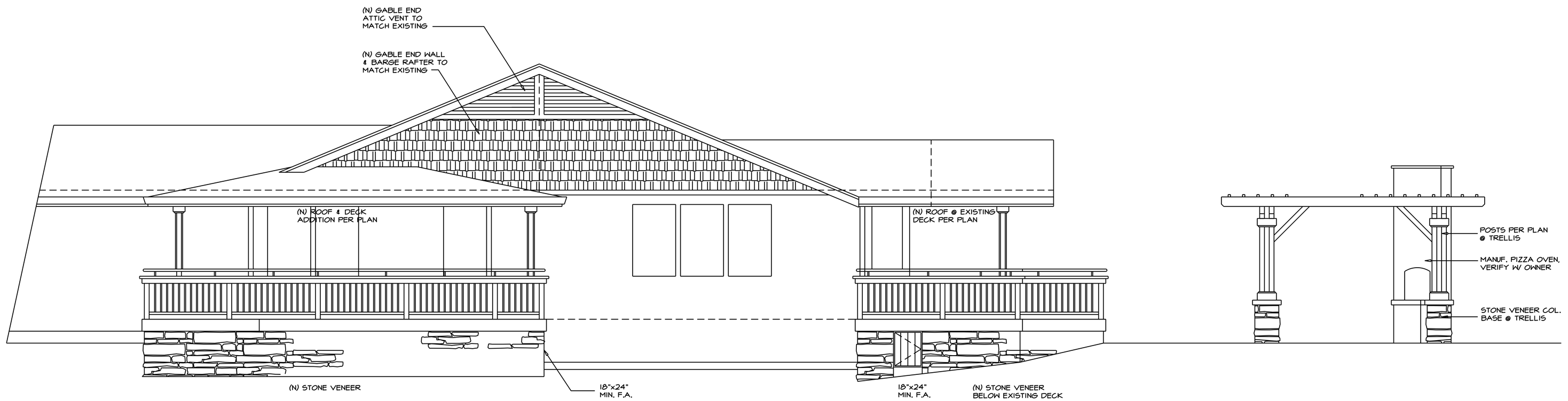

NORTH ELEVATION

0 4' 8' 16'

REVISIONS	BY

RICK KADELLO DESIGNER
PAUL LARSEN ARCHITECT

DESIGN FOR

DAVID & DALE PHILLIPS

121 MARY PAIGE LANE, SANTA ROSA

LICENSED ARCHITECT
PAUL RANDELL LARSEN
No. C21431
REN. 11-30-11
STATE OF CALIFORNIA

KADELLO & LARSEN
ARCHITECTURAL DESIGNS
9061 CONDE LANE, WINDSOR, CA (707) 838-2600

BY	PRL
CHK	PRL
DATE	9-24-09

SHEET

A2.1

JOB 0920

INT. ELEVATION

0 4' 8' 16'

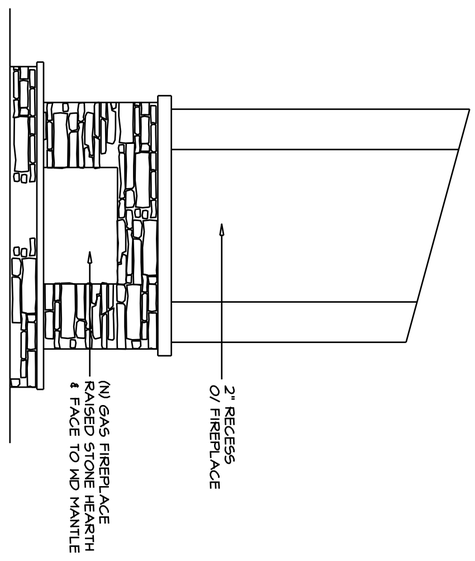

FLOOR PLAN

0 8' 16' 32'

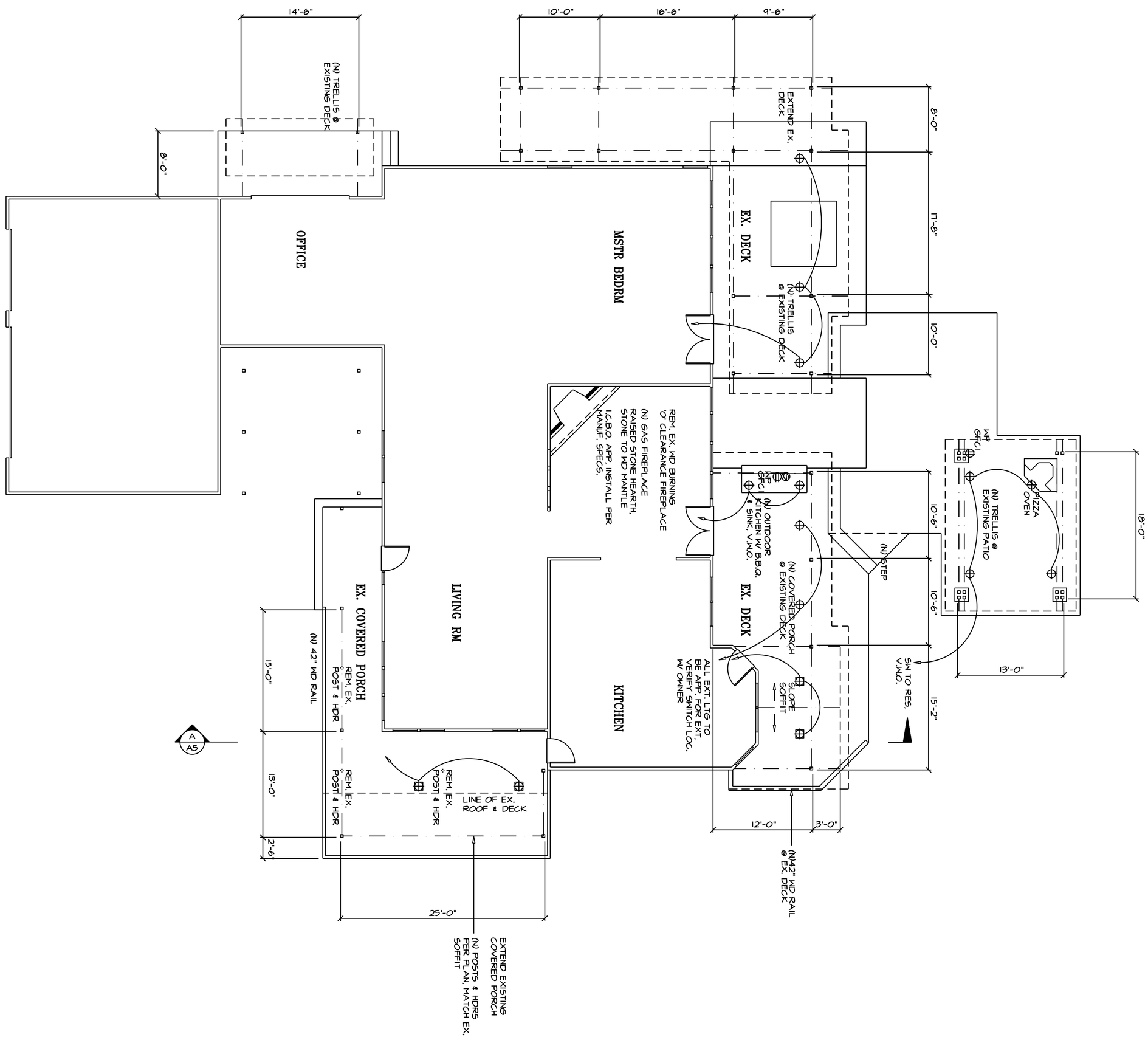

KADELLO & LARSEN
ARCHITECTURAL DESIGNS
9061 CONDE LANE, WINDSOR, CA (707) 838-2600

LICENSED ARCHITECT PAUL RANDELL LARSEN No. C21431 REN. 11-30-11 STATE OF CALIFORNIA

DESIGN FOR

DAVID & DALE PHILLIPS

121 MARY PAIGE LANE, SANTA ROSA

RICK KADELLO DESIGNER
PAUL LARSEN ARCHITECT

REVISIONS	BY

BY PRL
CHK PRL
DATE 9-24-09

JOB 0920
SHEET A3

ATTIC VENTING SCHEDULE

USE 3 1/2"x22 1/2" SCREEN VENTS
TYPICAL @ EAVES.

EACH VENT PROVIDES .5 SQ. FT.
OF FREE FLOW VENT.

PROVIDE ADDITIONAL VENT FOR EACH
EX. VENT DISPLACED

FRONT COVERED PORCH ADDITION:

TOTAL ATTIC AREA TO BE VENTED : 225
REQUIRED VENTILATION (1/150) : 1.5 SF
NO. OF SCREEN VENTS REQ. : 3

REAR COVERED PORCH ADDITION:

TOTAL ATTIC AREA TO BE VENTED : 560
REQUIRED VENTILATION (1/150) : 3.75 SF
NO. OF SCREEN VENTS REQ. : 8

VAULTED SOFFIT

VAULTED SOFFIT AREA IS NOT INCLUDED IN
ATTIC CALCULATIONS.

VENT ALL RAFTER SPACES @ EAVES

PROVIDE SHORT BLOCKS @ RIDGE
& MIDSPAN BLKS FOR CROSS VENTILATION.

PROVIDE CONT. RIDGE VENT PER PLAN

PROVIDE CROSS VENTING IN SUBROOF
SHEATHING OF VAULTED CEILINGS INTO
ADJACENT ATTIC SPACES AS OCCURS.

PROVIDE CROSS VENT BETWEEN RAFTER
BAYS @ SKYLIGHTS AS OCCURS.

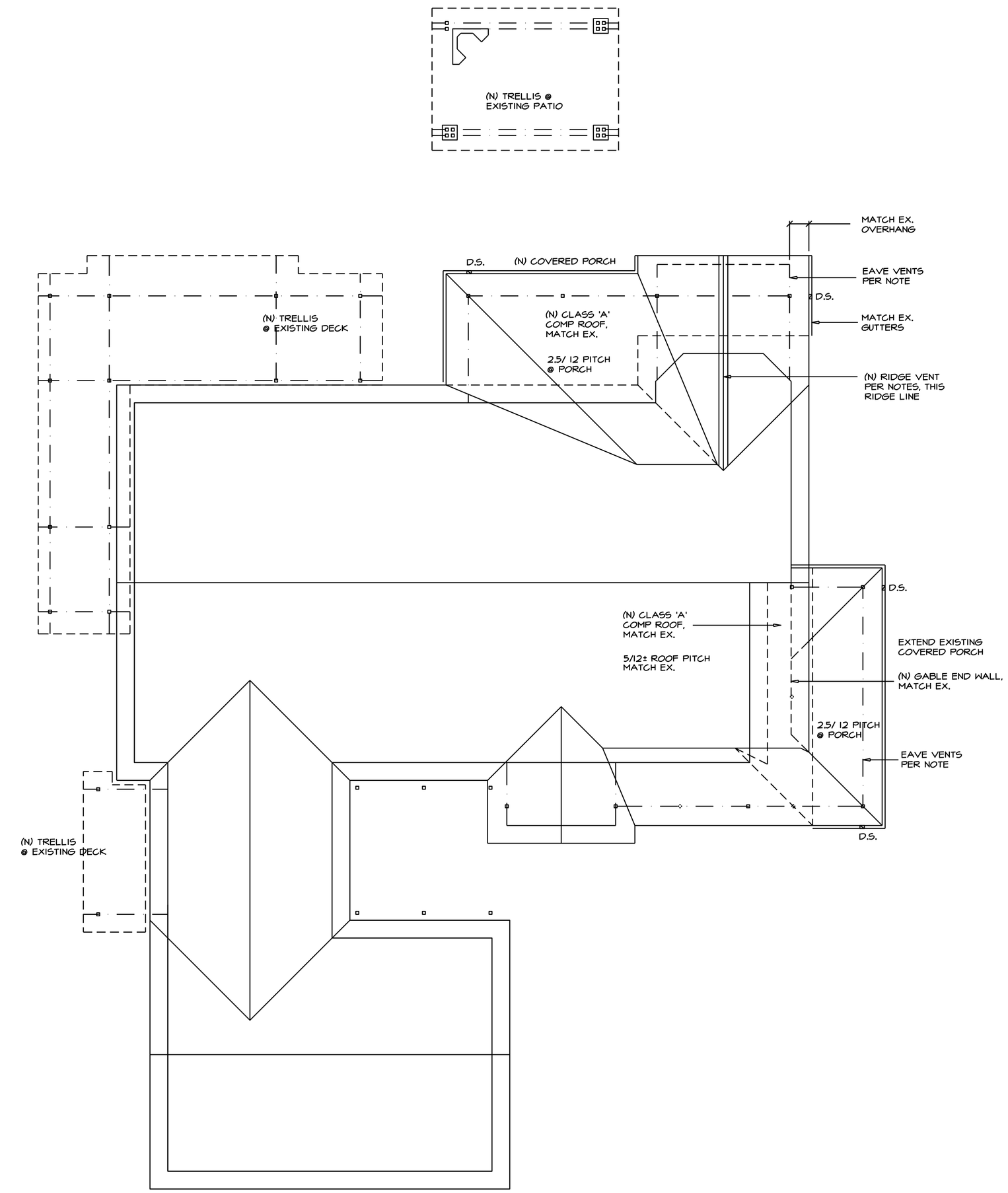

ROOF PLAN

0 8' 16' 32'

G.S.M. FLASH @ ROOF PENETRATIONS

G.S.M. FLASH @ ROOF TO WALL CONDITIONS

G.S.M. FLASH OR WEAVE ROOFING @ VALLEYS

HAND SEAL OR SELF SEALING COMP ROOF O/
2 LAYERS 30# FELT APPLIED SHINGLE FASHION
@ 2.5 / 12 ROOF PITCH

REVISIONS	BY

RICK KADELLO DESIGNER
PAUL LARSEN ARCHITECT

DESIGN FOR
DAVID & DALE PHILLIPS
121 MARY PAIGE LANE, SANTA ROSA

LICENSED ARCHITECT
PAUL RANDELL LARSEN
No. C21431
REN. 11-30-11
STATE OF CALIFORNIA

KADELLO & LARSEN
ARCHITECTURAL DESIGNS
9061 CONDE LANE, WINDSOR, CA (707) 838-2600

BY	PRL
CHK	PRL
DATE	9-24-09

SHEET
A4

JOB 0920

GENERAL CONSTRUCTION NOTES

1. The Contractor shall notify the Designer and/or Engineer of any discrepancies on drawings requiring clarification or revision before commencing with the work.
2. Drawings shall not be scaled. All dimensions related to existing conditions shall be verified by the Contractor. Details not specifically shown shall be of same nature as other similar conditions.
3. Structural design or review of temporary shoring, additional reinforcing, bracing, formwork scaffolding, erection anchors, etc. required for proper construction of the project shall be the responsibility of the contractor.
4. All windows and exterior doors are to be weatherstripped.
5. Doors between living area and garage shall be 1 3/8" solid core w/ self closer.
6. Provide 1/2" M.P. gypsum board @ tubs or showers up to 72" min. above drain inlet. (CBC 2512, CPC 412.7)
7. Provide smooth, hard non-absorbent surface to a height of not less than 70" above the drain inlet at showers. (CBC Sec. 807.1.3, CPC Sec. 412.7)
8. Provide 18"x24" Min. foundation access to all underfloor areas. Foundation access shall be within 20' of all plumbing cleanouts.
9. Provide 22"x30" Min. attic access into all attic areas.
10. Provide handrails @ all stairs
11. Provide minimum insulation levels per Title-24 report. All insulation materials shall have a flame spread rating not to exceed 25 and a smoke density rating not to exceed 450.
12. Provide protective netting to secure insulation @ wall to attic space areas.

ADDRESS SIGN REQUIREMENT

1. Each single family dwelling shall display the street address numbers in such a position as to be plainly visible and legible to approaching emergency vehicles from the street or road fronting the property. The street address numbers shall be displayed within one hundred (100) feet of any street fronting the property. The numerals shall be placed not lower than four feet from ground level nor more than 12' from ground level on the structure. The numerals shall be 4" tall minimum and shall be contrasting to the background to which they are attached. The numerals shall be illuminated during all hours of darkness.

2. Any light source used for premises identification shall be provided with a power source controlled only by a photo-electric device. No switch or other such device directly connected to such light source which enables the occupant to control the light source shall be installed. Nothing in this section shall preclude the requirement for circuit protection devices where applicable.

FIRE PROTECTION

1. Metal pre-fab fireplaces or wood stoves to be ICBO approved and installed as per manufacturer's specifications.
2. Enclosed usable space under stairs shall be 1 hour construction. (Sec. 1003.3.3.9)
3. Columns, posts & beams supporting a second story over the garage shall be protected with 1 hour assembly covered by 1/2" plywood or a minimum of 26 gauge metal 3' up from the finish floor.
4. Firestopping. Firestopping shall be provided in the following locations:
   - A. In concealed spaces of stud walls & partitions, including furred spaces, at the ceiling and floor levels and at 10 foot intervals along the length of the wall. CBC 708.2.1
   - B. At all interconnections between concealed vertical and horizontal spaces such as occur at soffits, drop ceilings and cove ceilings.
   - C. In concealed spaces between stair stringers at the top and bottom of the run and between studs along and in line with the run of stairs if the walls under the stairs are unfinished.
   - D. In openings around vents, pipes, ducts, chimneys, fireplaces and similar openings which afford a passage for fire at ceiling and floor levels, with non-combustible materials.
5. Boxing of flues. For the purpose of preventing insulation from coming in contact with chimney type flues which require airspace for their approval, all appliance flues passing through an attic shall have built around them at the top of the finished ceiling an open top box. The ceiling shall form the bottom of the box, and the box shall be at least 12 inches in height. The box shall have a minimum clearance of 2 inches from the flue at all points.
6. All chimneys attached to or constructed within buildings shall terminate with a 14 gauge, 3/4 inch, or 12 inch galvanized mesh spark arrestor. The top of the spark arrester shall be a minimum of 2 inches above the top of the chimney.
7. Laundry chutes & dumbwaiter shafts shall be lined on the inside with gypsum wallboard, with such lining covered with not less than No. 26 galvanized sheet metal gauge with all joints in such sheet metal locklapped. All openings into any such enclosures shall be protected by metal or metal-clad doors with either metal-clad jambs, castings or frames.
8. Through penetrations of the fire-resistive walls shall comply with the CBC Sec 709.6.2 or 709.6.3. (CBC Sec. 709.6.1)
9. Penetrations shall be installed as tested in the approved UBC Standard 7-1 rated assembly. (CBC Sec. 709.6.2)
10. Penetrations shall be protected by an approved penetration firestop system installed as tested in accordance with UBC Standard 7-5 and shall have an F rating not less than the required rating of the wall penetrated.(CBC Sec. 709.6.3)
11. Membrane penetrations of the fire-resistive walls shall comply with Sec. 709.6. (CBC Sec. 709.7)
    EXCEPTION: Walls may have openings for steel electrical outlet boxes not exceeding 16 square inches in area, provided the aggregate area of such openings is not more than 100 square inches for any 100 square feet of wall or partition area. Outlet boxes on opposite sides of wall and partitions shall be separated by a horizontal distance of at least 24 inches. Membrane penetrations for electrical outlet boxes of any material are permitted, provided that such boxes are tested for use in fire-resistive assemblies and installed in accordance with the tested assembly.
12. Through penetrations of the fire-resistive horizontal assemblies shall be enclosed in fire-resistive shaft enclosures in accordance with the CBC Sec 711.1 or shall comply with Sec. 710.2.2 or 710.2.3.

ALL GUARDRAILS SHALL BE MOUNTED SO THAT THE COMPLETED RAIL & SUPPORTING STRUCTURE ARE CAPABLE OF WITHSTANDING A LOAD OF AT LEAST 20 POUNDS PLF APPLIED HORIZ @ RIGHT ANGLES TO THE TOP RAIL, AND SO THAT INTERMEDIATE RAILS, PANEL FILLERS AND THEIR CONNECTIONS ARE CAPABLE OF WITH-STANDING A LOAD OF AT LEAST 25 POUNDS PER SQ FT APPLIED HORIZ @ RIGHT ANGLES OVER THE ENTIRE TRIBUTARY AREA, INCLUDING OPENINGS AND SPACES BETWEEN RAILS. CBC TABLE 16-B, FOOTNOTES B & 9.

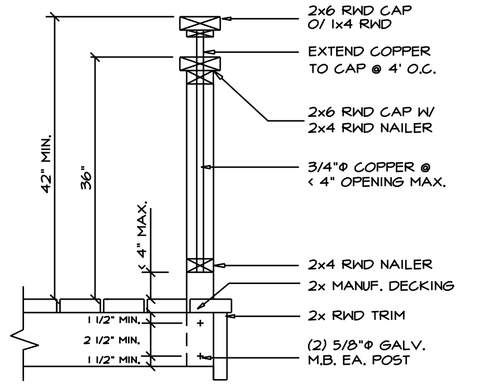

1 GUARDRAIL

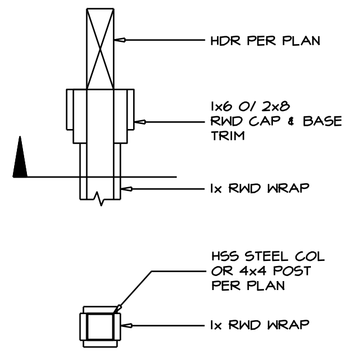

2 POST

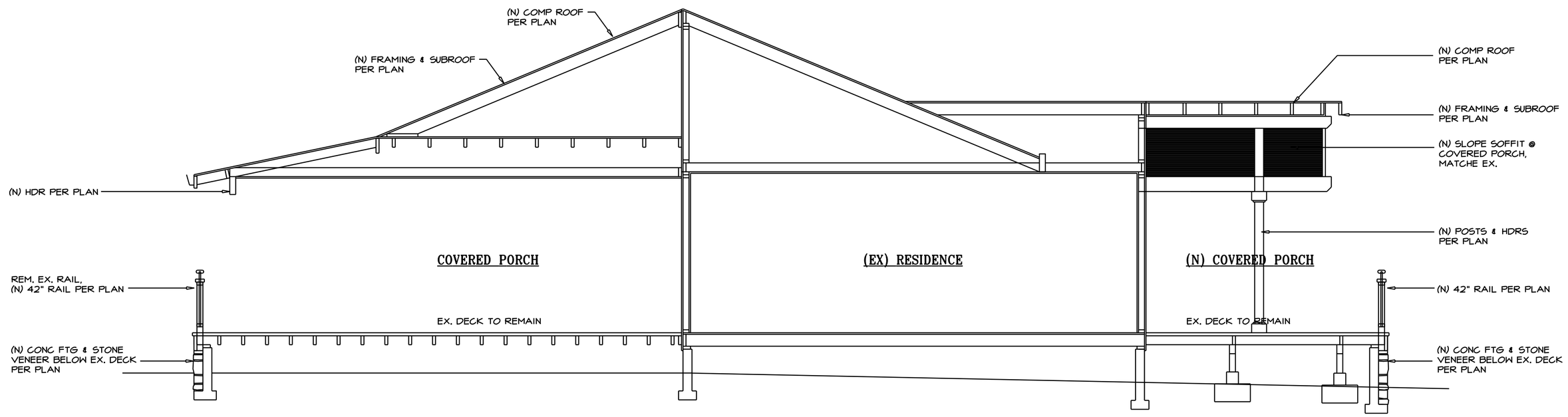

SECTION 'A'

0 4' 8' 16'

REVISIONS	BY

RICK KADELLO DESIGNER
PAUL LARSEN ARCHITECT

DESIGN FOR
DAVID & DALE PHILLIPS
121 MARY PAIGE LANE, SANTA ROSA

LICENSED ARCHITECT
PAUL RANDELL LARSEN
No. C21431
REN. 11-30-11
STATE OF CALIFORNIA

KADELLO & LARSEN
ARCHITECTURAL DESIGNS
9061 CONDE LANE, WINDSOR, CA (707) 838-2600

BY PRL
CHK PRL
DATE 9-24-09

SHEET
A5

JOB 0920

VICINITY MAP

NOT TO SCALE

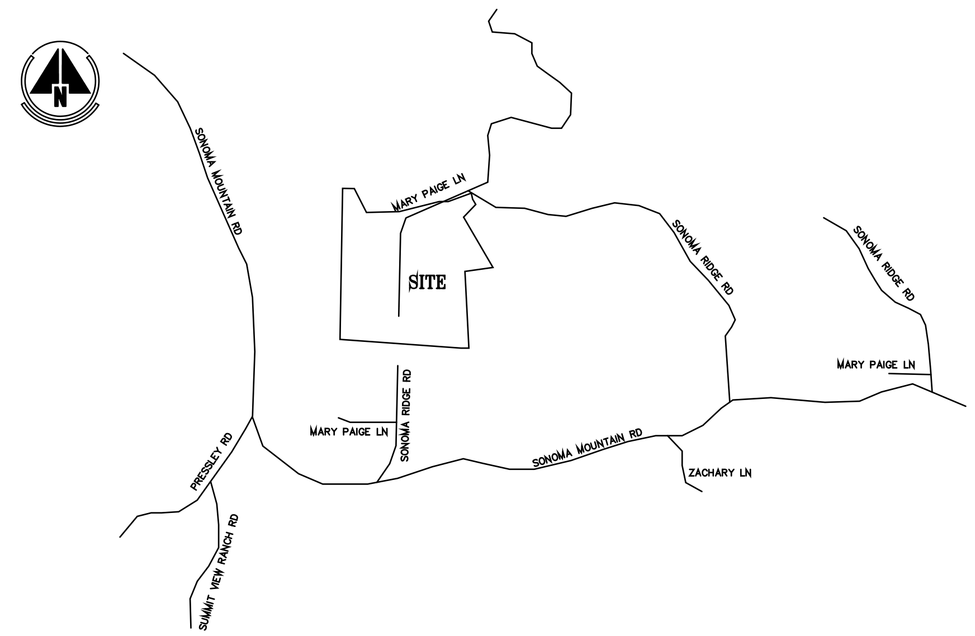

PROJECT

COVERED PORCH ADDITIONS
DECK EXTENSION
TRELLIS ADDITIONS

PROPERTY

PROJECT ADDRESS:
121 MARY PAIGE LANE, SANTA ROSA

A.P. NO: 049-020-029

ZONING: LIA B6 40/40-J-Z-SD

ACRES: 41.82

ADDITION AREAS

COVERD PORCH:		
FRONT	225	SQ FT
REAR	560	SQ FT
TRELLIS:		
@ OFFICE	125	SQ FT
@ MSTR BEDRM	820	SQ FT
@ REAR YARD	335	SQ FT
DECK:		
@ MSTR BEDRM	105	SQ FT

COLORS

BODY:
M.E

TRIM:
M.E.

ROOF:
M.E.

VERIFY WITH OWNER

CODES

THESE DESIGN DOCUMENTS HAVE BEEN PREPARED UNDER THE FOLLOWING CODES AND ORDINANCES:

2007 CALIF BUILDING CODE
2007 CALIF ELEC CODE
2007 CALIF PLUMB CODE
2007 CALIF MECH CODE

DEF. SUBMITTALS

UNDER THE PROVISION OF SECTION 106.3.4.2 OF THE UBC, SUBMITTAL OF THE FOLLOWING ITEMS SHALL BE DEFERRED:

NONE

SHEET INDEX

TITLE SHEET

T GENERAL PROJECT INFORMATION
VICINITY MAP

ARCHITECTURAL

A1 SITE PLAN
A2 ELEVATIONS
A2.1 ELEVATIONS
A3 FLOOR PLAN
INTERIOR ELEVATION
A4 ROOF PLAN
A5 SECTION
ARCHITECTURAL NOTES & DETAILS

STRUCTURAL

SN STRUCTURAL NOTES
S1.1 FOUNDATION PLAN
S1.2 ROOF FRMG PLAN
S1 STANDARD STRUCTURAL DETAILS
S2 STRUCTURAL DETAILS

ATTACHMENTS

STRUCTURAL ENGINEERING
CALCULATIONS

CONSULTANTS

STRUCTURAL ENG.

JOHNSON, DEBOIS & FORREST
405 WEST COLLEGE AVE. SUITE E
SANTA ROSA, CA
707-575-0911
JOB NO 09066

REVISIONS	BY

RICK KADELLO, DESIGNER
PAUL LARSEN, ARCHITECT

DESIGN FOR
DAVID & DALE PHILLIPS
121 MARY PAIGE LANE, SANTA ROSA

LICENSED ARCHITECT
PAUL RANDELL LARSEN
No. C21431
REN 11-30-11
STATE OF CALIFORNIA

KADELLO & LARSEN
ARCHITECTURAL DESIGNS
9061 CONDE LANE, WINDSOR, CA (707) 838-2600

BY PRL
CHK PRL
DATE 9-24-09

SHEET
T

JOB 0920

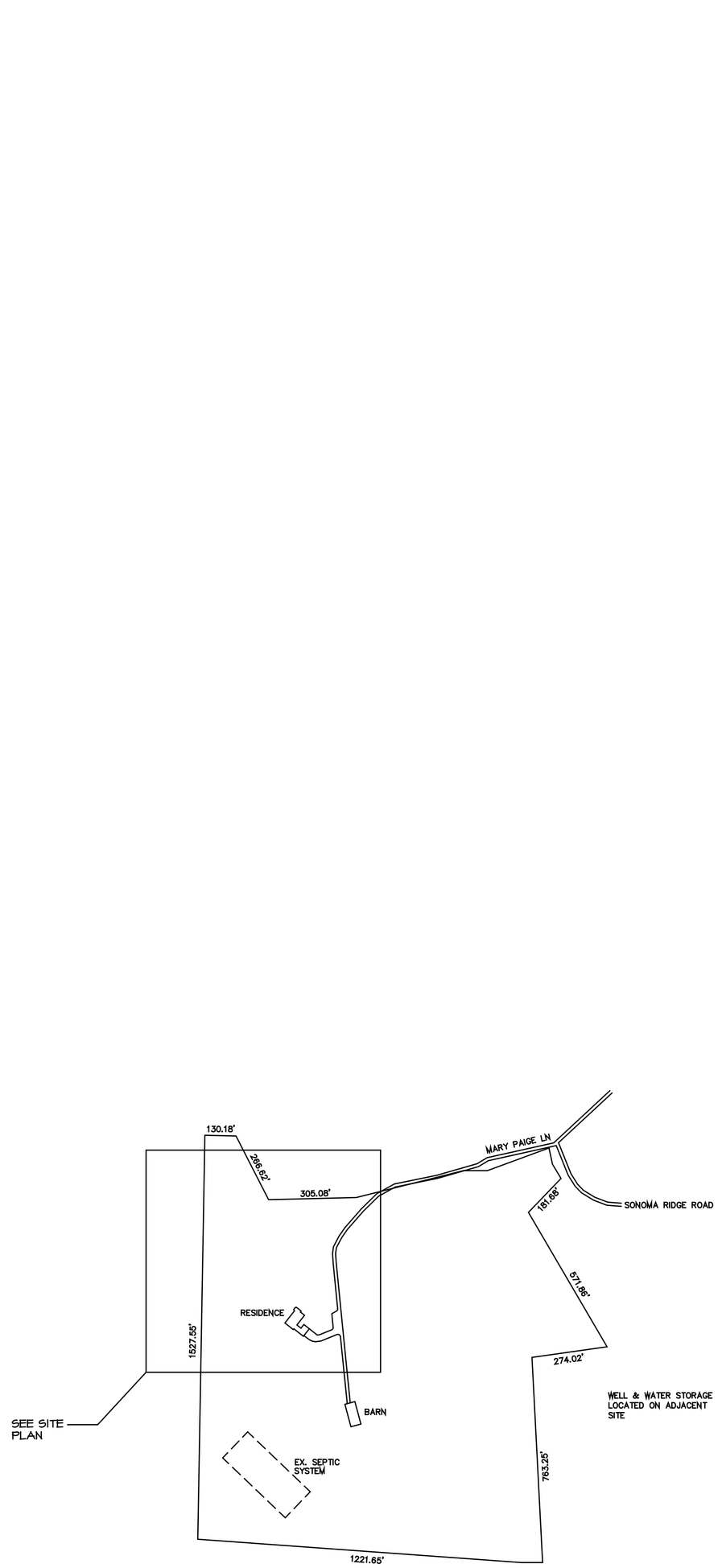

PLOT PLAN
NO SCALE

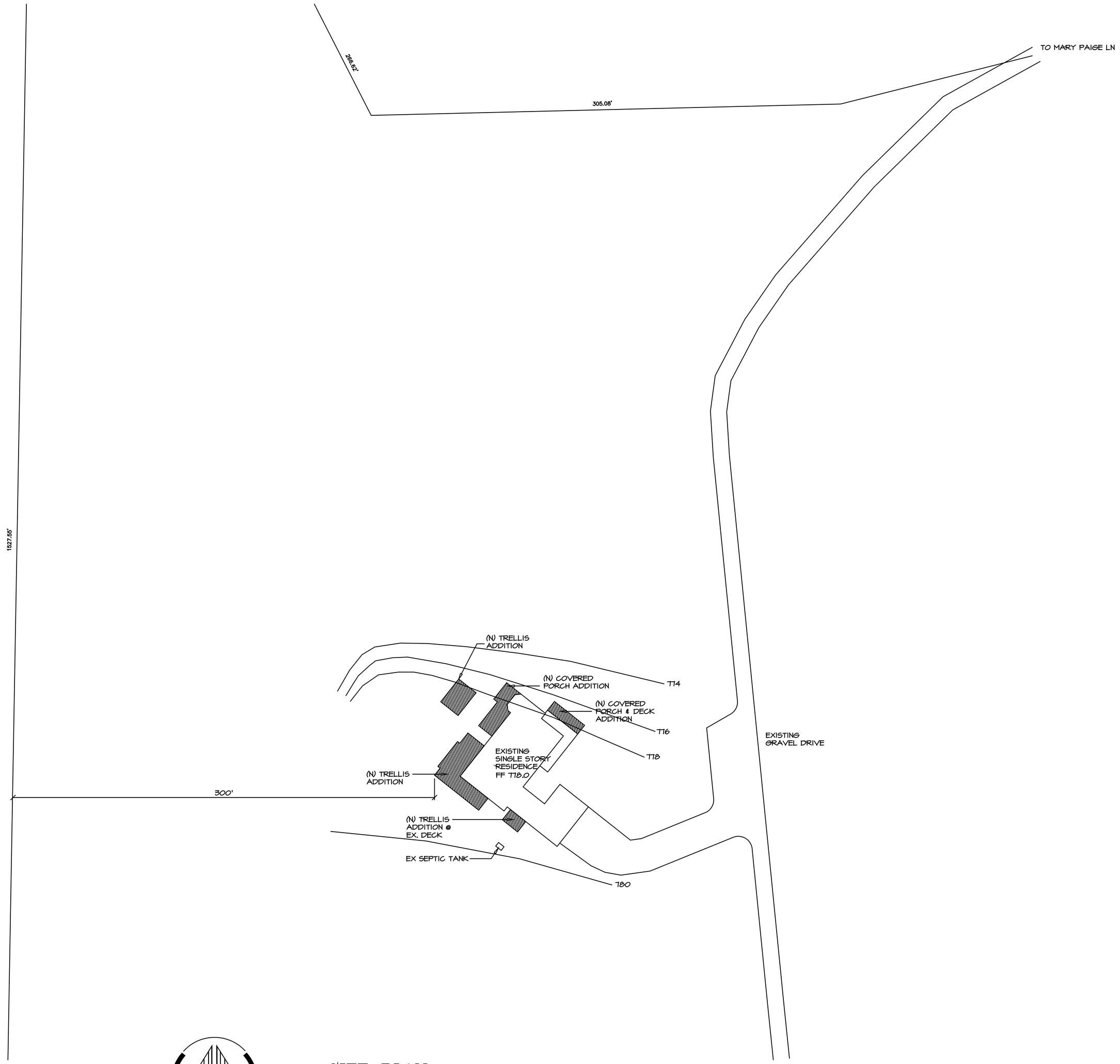

SITE PLAN
0 40' 80' 160'

REVISIONS	BY

RICK KADELLO DESIGNER
PAUL LARSEN ARCHITECT

DESIGN FOR
DAVID & DALE PHILLIPS
121 MARY PAIGE LANE, SANTA ROSA

LICENSED ARCHITECT
PAUL RANDELL LARSEN
No. C21431
REN. 11-30-11
STATE OF CALIFORNIA

KADELLO & LARSEN
ARCHITECTURAL DESIGNS
9061 CONDE LANE, WINDSOR, CA (707) 838-2600

BY	PRL
CHK	PRL
DATE	9-24-09

SHEET
A1

JOB 0920

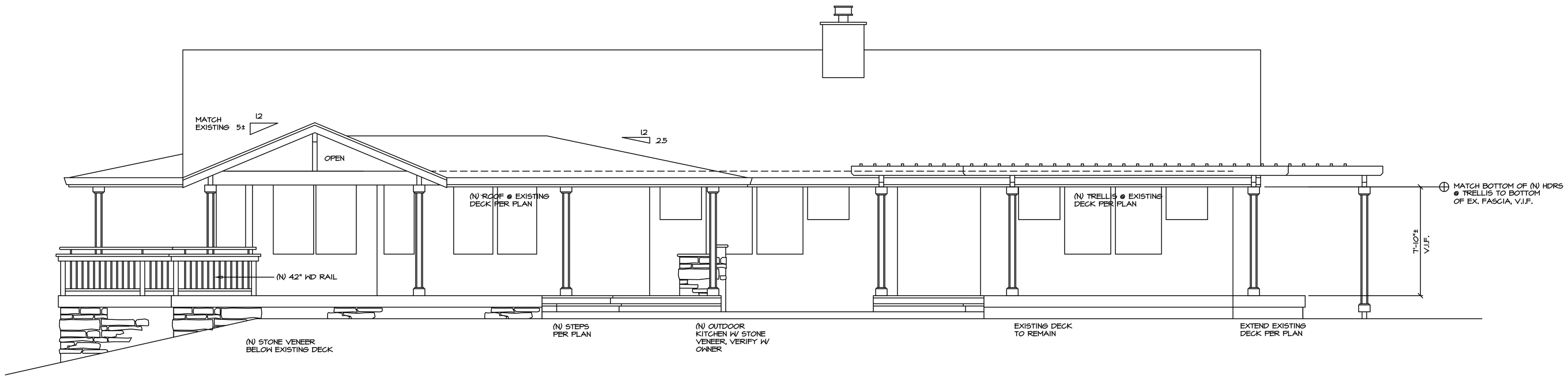

WEST ELEVATION

0 4' 8' 16'

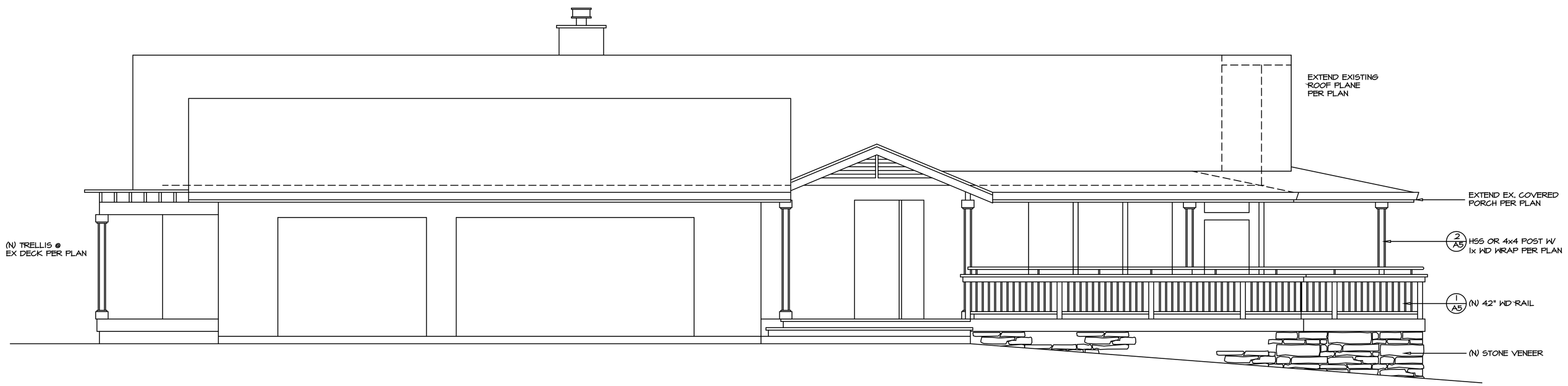

EAST ELEVATION

0 4' 8' 16'

REVISIONS	BY

RICK KADELLO DESIGNER
PAUL LARSEN ARCHITECT

DESIGN FOR
DAVID & DALE PHILLIPS
121 MARY PAIGE LANE, SANTA ROSA

LICENSED ARCHITECT
PAUL RANDELL LARSEN
No. C21431
REN. 11-30-11
STATE OF CALIFORNIA

KADELLO & LARSEN
ARCHITECTURAL DESIGNS
9061 CONDE LANE, WINDSOR, CA (707) 838-2600

BY PRL
CHK PRL
DATE 9-24-09

SHEET
A2

JOB 0920

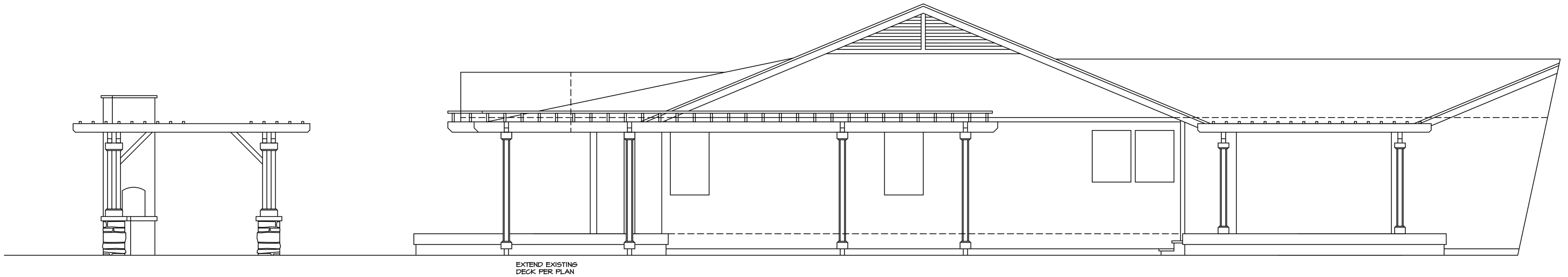

SOUTH ELEVATION

0 4' 8' 16'

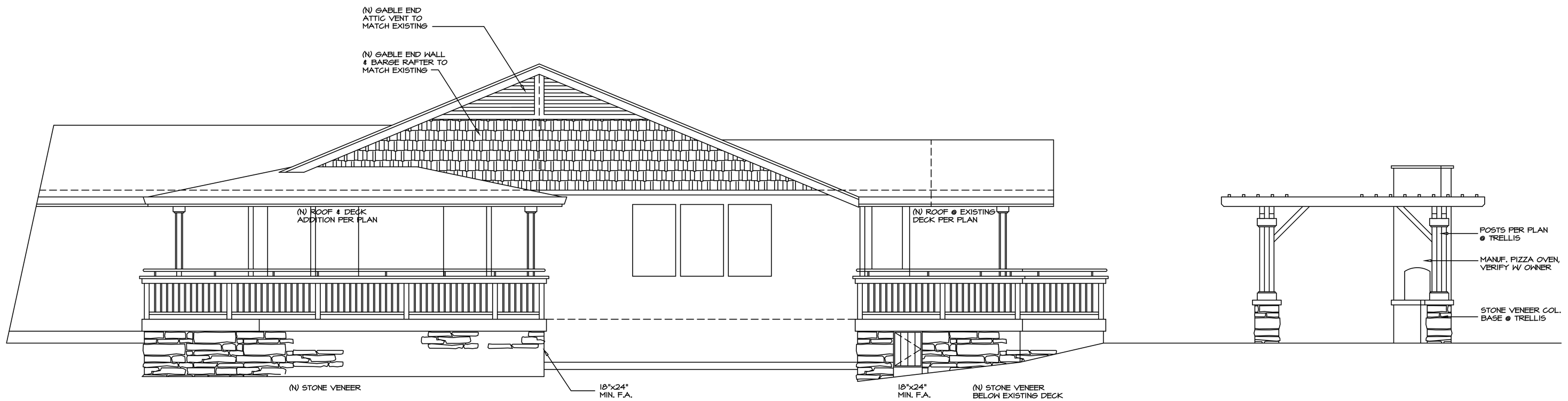

NORTH ELEVATION

0 4' 8' 16'

REVISIONS	BY

RICK KADELLO DESIGNER
PAUL LARSEN ARCHITECT

DESIGN FOR

DAVID & DALE PHILLIPS

121 MARY PAIGE LANE, SANTA ROSA

LICENSED ARCHITECT
PAUL RANDELL LARSEN
No. C21431
REN. 11-30-11
STATE OF CALIFORNIA

KADELLO & LARSEN
ARCHITECTURAL DESIGNS
9061 CONDE LANE, WINDSOR, CA (707) 838-2600

BY	PRL
CHK	PRL
DATE	9-24-09

SHEET

A2.1

JOB 0920

INT. ELEVATION

0 4' 8' 16'

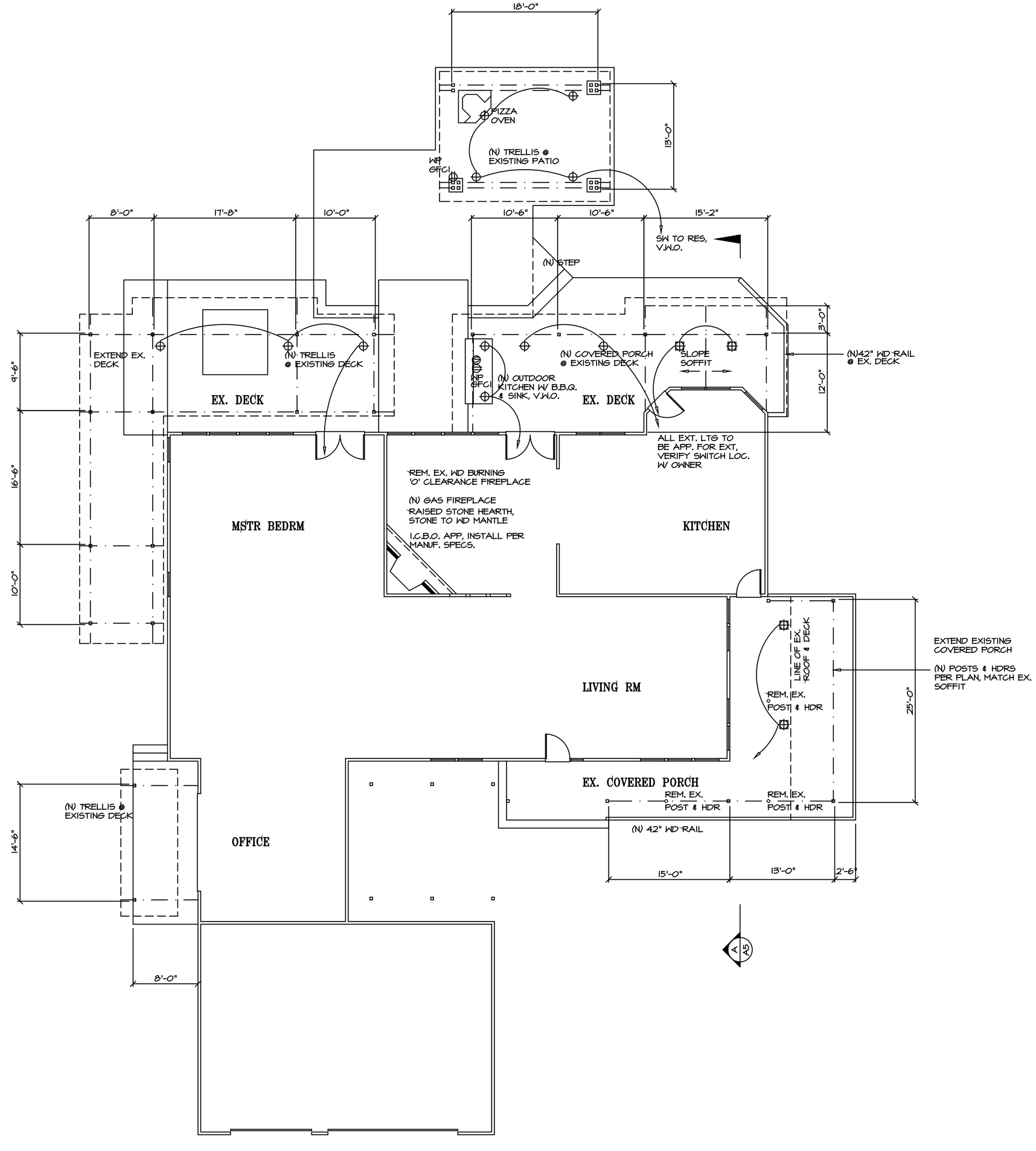

FLOOR PLAN

0 8' 16' 32'

REVISIONS	BY

RICK KADELLO DESIGNER
PAUL LARSEN ARCHITECT

DESIGN FOR
DAVID & DALE PHILLIPS
121 MARY PAIGE LANE, SANTA ROSA

LICENSED ARCHITECT
PAUL RANDELL LARSEN
No. C21431
REN. 11-30-11
STATE OF CALIFORNIA

KADELLO & LARSEN
ARCHITECTURAL DESIGNS
9061 CONDE LANE, WINDSOR, CA (707) 838-2600

BY PRL

CHK PRL

DATE 9-24-09

SHEET
A3

JOB 0920

ATTIC VENTING SCHEDULE

USE 3 1/2"x22 1/2" SCREEN VENTS
TYPICAL @ EAVES.

EACH VENT PROVIDES .5 SQ. FT.
OF FREE FLOW VENT.

PROVIDE ADDITIONAL VENT FOR EACH
EX. VENT DISPLACED

FRONT COVERED PORCH ADDITION:

TOTAL ATTIC AREA TO BE VENTED : 225
REQUIRED VENTILATION (1/150) : 1.5 SF
NO. OF SCREEN VENTS REQ. : 3

REAR COVERED PORCH ADDITION:

TOTAL ATTIC AREA TO BE VENTED : 560
REQUIRED VENTILATION (1/150) : 3.75 SF
NO. OF SCREEN VENTS REQ. : 8

VAULTED SOFFIT

VAULTED SOFFIT AREA IS NOT INCLUDED IN
ATTIC CALCULATIONS.

VENT ALL RAFTER SPACES @ EAVES

PROVIDE SHORT BLOCKS @ RIDGE
& MIDSPAN BLKS FOR CROSS VENTILATION.

PROVIDE CONT. RIDGE VENT PER PLAN

PROVIDE CROSS VENTING IN SUBROOF
SHEATHING OF VAULTED CEILINGS INTO
ADJACENT ATTIC SPACES AS OCCURS.

PROVIDE CROSS VENT BETWEEN RAFTER
BAYS @ SKYLIGHTS AS OCCURS.

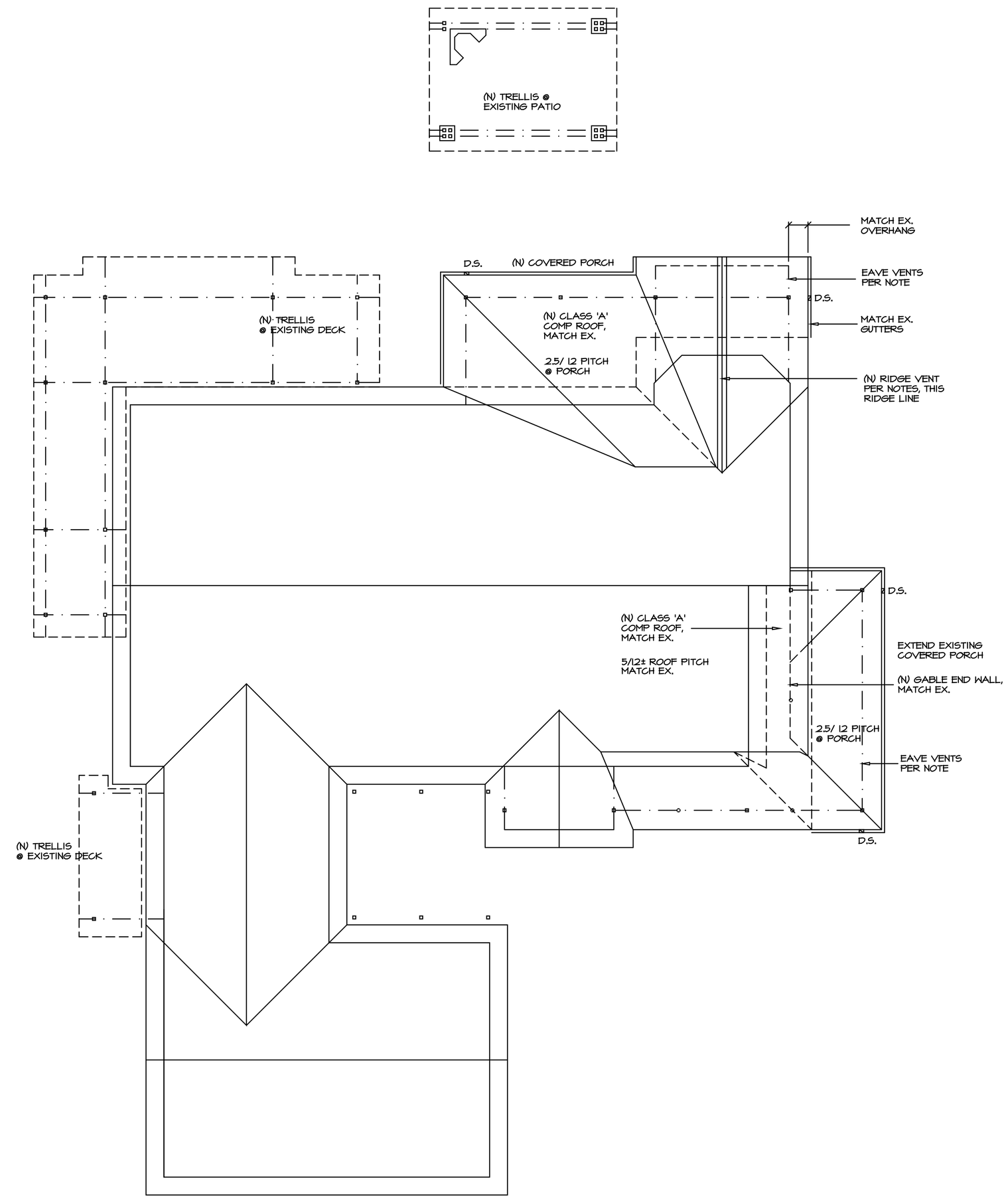

ROOF PLAN

0 8' 16' 32'

G.S.M. FLASH @ ROOF PENETRATIONS

G.S.M. FLASH @ ROOF TO WALL CONDITIONS

G.S.M. FLASH OR WEAVE ROOFING @ VALLEYS

HAND SEAL OR SELF SEALING COMP ROOF O/
2 LAYERS 30# FELT APPLIED SHINGLE FASHION
@ 2.5 / 12 ROOF PITCH

REVISIONS	BY

RICK KADELLO DESIGNER
PAUL LARSEN ARCHITECT

DESIGN FOR
DAVID & DALE PHILLIPS
121 MARY PAIGE LANE, SANTA ROSA

LICENSED ARCHITECT
PAUL RANDELL LARSEN
No. C21431
REN. 11-30-11
STATE OF CALIFORNIA

KADELLO & LARSEN
ARCHITECTURAL DESIGNS
9061 CONDE LANE, WINDSOR, CA (707) 838-2600

BY	PRL
CHK	PRL
DATE	9-24-09

SHEET
A4

JOB 0920

GENERAL CONSTRUCTION NOTES

1. The Contractor shall notify the Designer and/or Engineer of any discrepancies on drawings requiring clarification or revision before commencing with the work.
2. Drawings shall not be scaled. All dimensions related to existing conditions shall be verified by the Contractor. Details not specifically shown shall be of same nature as other similar conditions.
3. Structural design or review of temporary shoring, additional reinforcing, bracing, formwork scaffolding, erection anchors, etc. required for proper construction of the project shall be the responsibility of the contractor.
4. All windows and exterior doors are to be weatherstripped.
5. Doors between living area and garage shall be 1 3/8" solid core w/ self closer.
6. Provide 1/2" M.R. gypsum board @ tubs or showers up to 72" min. above drain inlet. (CBC 2512, CPC 412.7)
7. Provide smooth, hard non-absorbent surface to a height of not less than 70" above the drain inlet at showers. (CBC Sec. 807.1.3, CPC Sec. 412.7)
8. Provide 18"x24" Min. foundation access to all underfloor areas. Foundation access shall be within 20' of all plumbing cleanouts.
9. Provide 22"x30" Min. attic access into all attic areas.
10. Provide handrails @ all stairs .
11. Provide minimum insulation levels per Title-24 report. All insulation materials shall have a flame spread rating not to exceed 25 and a smoke density rating not to exceed 450.
12. Provide protective netting to secure insulation @ wall to attic space areas.

ADDRESS SIGN REQUIREMENT

1. Each single family dwelling shall display the street address numbers in such a position as to be plainly visible and legible to approaching emergency vehicles from the street or road fronting the property. The street address numbers shall be displayed within one hundred (100) feet of any street fronting the property. The numerals shall be placed not lower than four feet from ground level nor more than 12' from ground level on the structure. The numerals shall be 4" tall minimum and shall be contrasting to the background to which they are attached. The numerals shall be illuminated during all hours of darkness.

2. Any light source used for premises identification shall be provided with a power source controlled only by a photo-electric device. No switch or other such device directly connected to such light source which enables the occupant to control the light source shall be installed. Nothing in this section shall preclude the requirement for circuit protection devices where applicable.

FIRE PROTECTION

1. Metal pre-fab fireplaces or wood stoves to be ICBO approved and installed as per manufacturer's specifications.
2. Enclosed usable space under stairs shall be 1 hour construction. (Sec. 1003.3.3.9)
3. Columns, posts & beams supporting a second story over the garage shall be protected with 1 hour assembly covered by 1/2" plywood or a minimum of 26 gauge metal 3' up from the finish floor.
4. Firestopping. Firestopping shall be provided in the following locations:
   - A. In concealed spaces of stud walls & partitions, including furred spaces, at the ceiling and floor levels and at 10 foot intervals along the length of the wall. CBC 708.2.1
   - B. At all interconnections between concealed vertical and horizontal spaces such as occur at soffits, drop ceilings and cove ceilings.
   - C. In concealed spaces between stair stringers at the top and bottom of the run and between studs along and in line with the run of stairs if the walls under the stairs are unfinished.
   - D. In openings around vents, pipes, ducts, chimneys, fireplaces and similar openings which afford a passage for fire at ceiling and floor levels, with non-combustible materials.
5. Boxing of flues. For the purpose of preventing insulation from coming in contact with chimney type flues which require airspace for their approval, all appliance flues passing through an attic shall have built around them at the top of the finished ceiling an open top box. The ceiling shall form the bottom of the box, and the box shall be at least 12 inches in height. The box shall have a minimum clearance of 2 inches from the flue at all points.
6. All chimneys attached to or constructed within buildings shall terminate with a 14 gauge, 3/4 inch, or 12 inch galvanized mesh spark arrestor. The top of the spark arrester shall be a minimum of 2 inches above the top of the chimney.
7. Laundry chutes & dumbwaiter shafts shall be lined on the inside with gypsum wallboard, with such lining covered with not less than No. 26 galvanized sheet metal gauge with all joints in such sheet metal locklapped. All openings into any such enclosures shall be protected by metal or metal-clad doors with either metal-clad jambs, castings or frames.
8. Through penetrations of the fire-resistive walls shall comply with the CBC Sec 709.6.2 or 709.6.3. (CBC Sec. 709.6.1)
9. Penetrations shall be installed as tested in the approved UBC Standard 7-1 rated assembly. (CBC Sec. 709.6.2)
10. Penetrations shall be protected by an approved penetration firestop system installed as tested in accordance with UBC Standard 7-5 and shall have an F rating not less than the required rating of the wall penetrated.(CBC Sec. 709.6.3)
11. Membrane penetrations of the fire-resistive walls shall comply with Sec. 709.6. (CBC Sec. 709.7)
    EXCEPTION: Walls may have openings for steel electrical outlet boxes not exceeding 16 square inches in area, provided the aggregate area of such openings is not more than 100 square inches for any 100 square feet of wall or partition area. Outlet boxes on opposite sides of wall and partitions shall be separated by a horizontal distance of at least 24 inches. Membrane penetrations for electrical outlet boxes of any material are permitted, provided that such boxes are tested for use in fire-resistive assemblies and installed in accordance with the tested assembly.
12. Through penetrations of the fire-resistive horizontal assemblies shall be enclosed in fire-resistive shaft enclosures in accordance with the CBC Sec 711.1 or shall comply with Sec. 710.2.2 or 710.2.3.

ALL GUARDRAILS SHALL BE MOUNTED SO THAT THE COMPLETED RAIL & SUPPORTING STRUCTURE ARE CAPABLE OF WITHSTANDING A LOAD OF AT LEAST 20 POUNDS PLF APPLIED HORIZ @ RIGHT ANGLES TO THE TOP RAIL, AND SO THAT INTERMEDIATE RAILS, PANEL FILLERS AND THEIR CONNECTIONS ARE CAPABLE OF WITH-STANDING A LOAD OF AT LEAST 25 POUNDS PER SQ FT APPLIED HORIZ @ RIGHT ANGLES OVER THE ENTIRE TRIBUTARY AREA, INCLUDING OPENINGS AND SPACES BETWEEN RAILS. CBC TABLE 16-B, FOOTNOTES b & q.

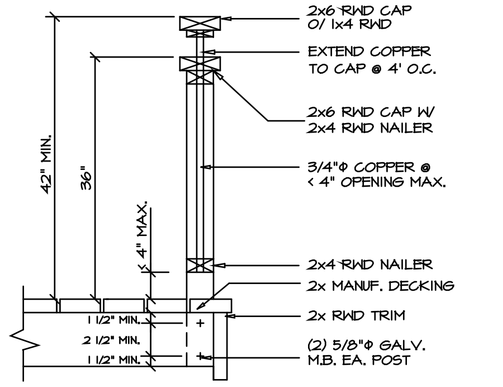

1 GUARDRAIL

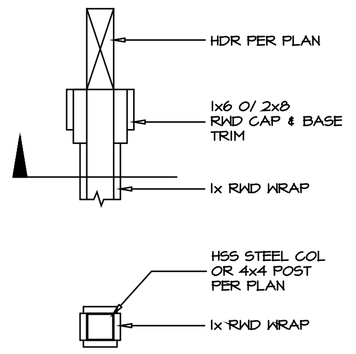

2 POST

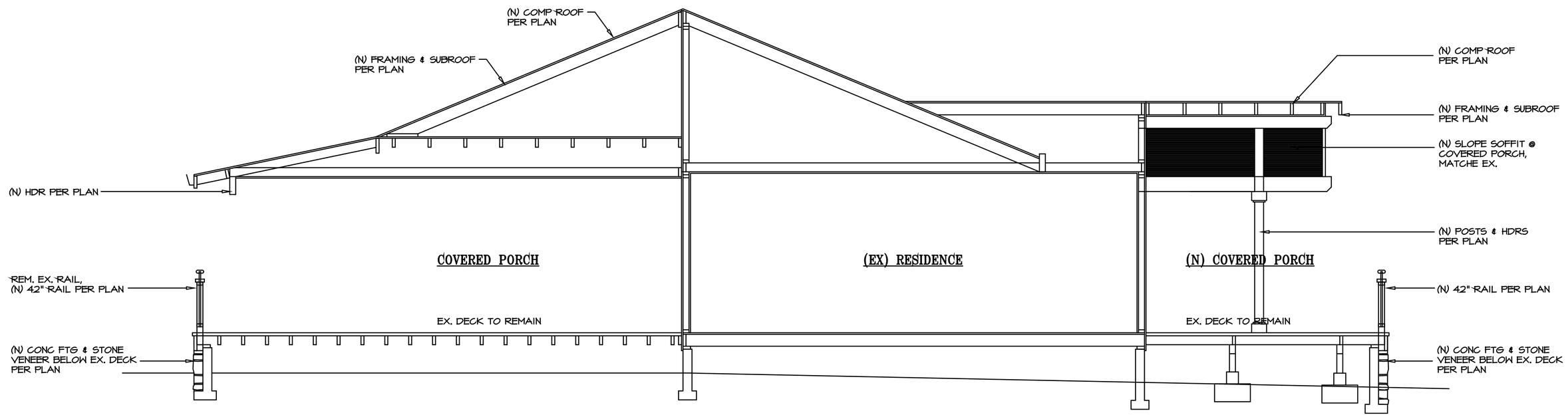

SECTION 'A'

0 4' 8' 16'

REVISIONS	BY

RICK KADELLO DESIGNER
PAUL LARSEN ARCHITECT

DESIGN FOR
DAVID & DALE PHILLIPS
121 MARY PAIGE LANE, SANTA ROSA

LICENSED ARCHITECT
PAUL RANDELL LARSEN
No. C21431
REN. 11-30-11
STATE OF CALIFORNIA

KADELLO & LARSEN
ARCHITECTURAL DESIGNS
9061 CONDE LANE, WINDSOR, CA (707) 838-2600

BY PRL
CHK PRL
DATE 9-24-09

SHEET
A5

JOB 0920

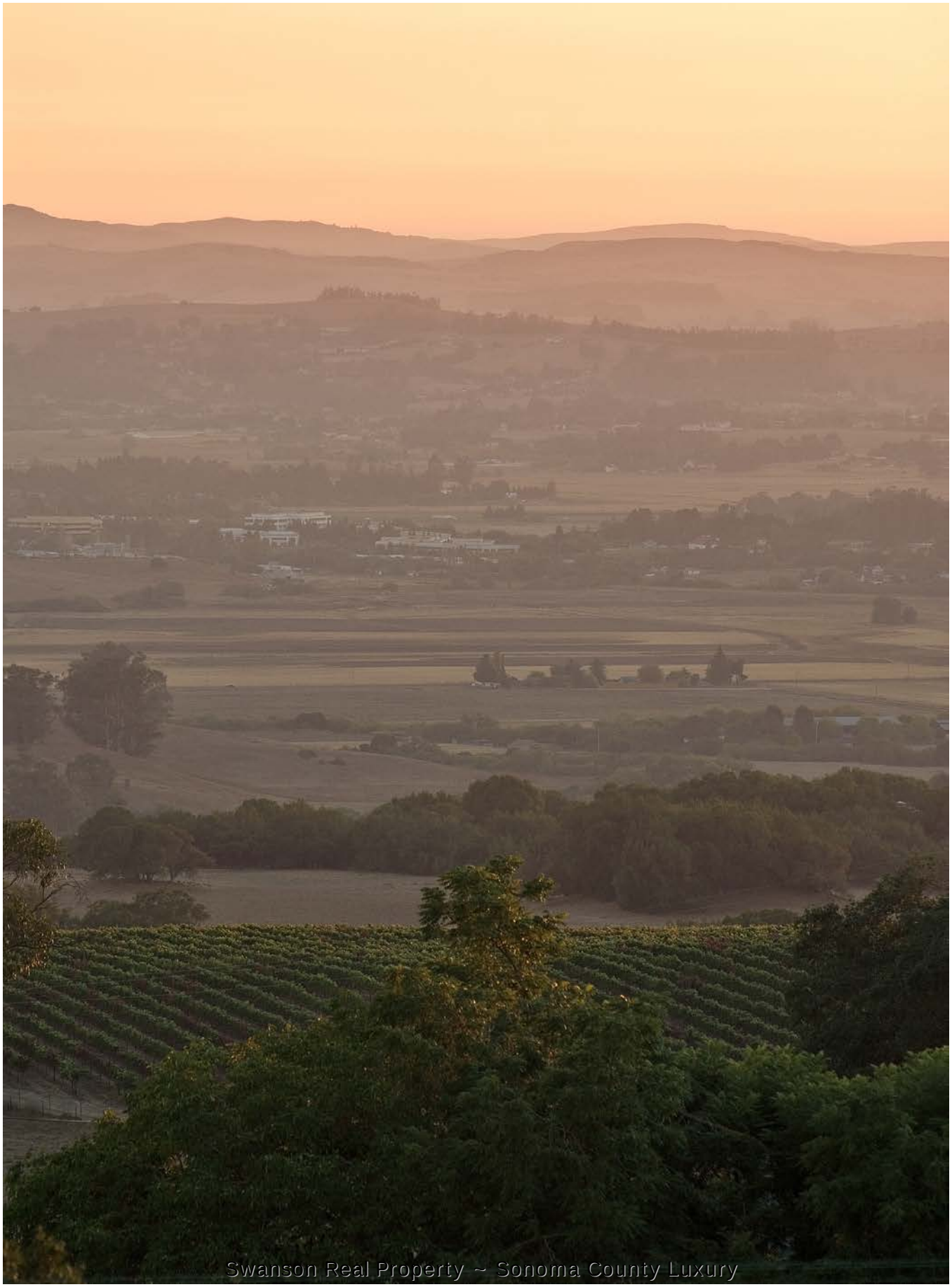
Swanson Real Property ~ Sonoma County Luxury