CONSTRUCTION NOTES

1. ALL ELECTRICAL, MECHANICAL, AND PLUMBING WORK, AND THE METHODS OF CONSTRUCTION AND INSTALLATION THEREOF SHALL CONFORM TO SONOMA COUNTY STANDARDS AND/OR UNIFORM PLUMBING CODE AND NATIONAL ELECTRICAL CODE, AND TO ALL LOCAL, STATE, FEDERAL AND OTHER LAWS PERTAINING TO THIS WORK.

2. NO CONSTRUCTION SHALL BEGIN ON THE SEPTIC SYSTEM BETWEEN NOVEMBER 1 AND MAY 1 WITHOUT PRIOR APPROVAL FROM THE DISIGNER. THE CONTRACTOR SHALL PREVENT ALL SURFACE DRAINAGE FROM ENTERING THE LEACHLINES AND SEPTIC SYSTEM DURING CONSTRUCTION.

3. PRIOR TO CONSTRUCTION, THE CONTRACTOR SHALL SECURE THE LATEST REGULATIONS FROM SONOMA COUNTY PRMD. REQUIRMENTS OF THESE REGULATIONS SHALL BE PERFORMED AS A PART OF THIS SEPTIC SYSTEM INSALLATION.

4. THE LOCATIONS SHOWN FOR THE LEACHLINES ARE APPROXIMATE; FINAL LOCATIONS ARE TO BE DETERMINED IN THE FIELD AND BE AS CLOSE AS POSSIBLE TO THE PLAN LOCATIONS.

5. THE DESIGNER SHALL BE NOTIFIED IMMEDIATELY OF ANY CONDITIONS DISCOVERED DURING CONSTRUCTIONS.

6. NO GUARANTEE IS INTENDED THAT UNDERGROUND OBSTRUCTIONS, NOT SHOWN ON THE PLANS, MAY NOT BE ENCOUNTERED. THOSE SHOWN ARE BASED ON INFORMATION AVAILABLE AND THE CONTRACTOR IS CAUTIONED THAT THE OWNER AND THE DESIGNER OF THE CONTY OF SONOMA ASSUME NO RESPONSIBILITY FOR ANY OBSTRUCTION EITHER SHOWN OR NOT SHOWN ON THESE PLANS.

7. THE CONTRACTOR SHALL UNCOVER EXISTING BURIED UTILITIES WITH UTILITY OWNER TO VERIFY LOCATIONS AND ELEVATIONS OF UTILITIES. BURIED UTILITIES INCLUDE BUT ARE NOT LIMITED TO WATER MAINS, SEWER LINES, STORM DRAINS, GAS MAINS AND LATERALS, ELECTRICAL DISTRIBUTION LINES AND TELEPHONE LINES. ALL UTILITIES CONFLICTING WITH THE PROPOSED CONSTRUCTION SHALL BE RELOCATED PRIOR TO THE START OF CONSTRUCTION. USA (UNDERGROUND SERVICE ALERT) SHOULD BE CONTACTED AT LEAST 24 HOURS PRIOR TO EXCAVATION.

8. ONLY THE PRIMARY SYSTEM IS TO BE CONSTRUCTED AT THIS TIME. THE RESERVE EXPANSIONS AREAS ARE TO BE HELD FOR FUTURE REPAIRS AND POTENTIAL REPLACEMENT OF THE PRIMARY SYSTEM.

9. CONSTRUCTION OF THE SYSTEM IS TO MINIMIZE GROUNDWATER INTRUSION INTO TANKS, RISERS AND VALVE BOXES. FINISH GRADING SHALL DIRECT SURFACE WATER AWAY FROM THE SYSTEM AND MINIMIZE PONDING WITHIN 50 FEET OF THE SYSTEM.

10. ALL GRADED AREAS AND EXPOSED SOIL WITHIN THIS PROJECT SHALL BE SEEDED FOR EROSION CONTROL PRIOR TO THE ONSET OF WINTER RAINS.

11. NO CUTS, CHANNELS, DRAINAGE COURSES OR ROADSIDE DITCHES ARE ALLOWED WITHIN 50 FEET OF ANY LEACH LINE OR EXPANSION LEACH LINE. SOIL IN PRIMARY AND EXPANSION AREAS ARE NOT TO BE DISTURBED PRIOR TO OR AFTER CONSTRUCTION. HOOFED ANIMALS ARE NOT ALLOWED IN THE AREA OF THE PRIMARY OR EXPANSIONS FIELDS.

12. A MINIMUM FALL OF 1/4 INCH PER LINEAL FOOT FOR THE PIPE SHALL BE MAINTAINED BETWEEN THE HOUSE AND THE SEPTIC TANK. THE PIPE BETWEEN THE HOUSE AND SEPTIC SHALL BE 3 INCH ABS SCHEDULE 40 OR EQUIVALENT.

13. FOR A PUMPED SYSTEM, SUMPS REQUIRE A BUILDING PERMIT OR USE OF A STANDARD SUMP DESIGN WHOSE CONSTRUCTION ALREADY HAS THE APPROVAL OF THE BUILDING SECTION, PRMD. AN ELECTRICAL PERMIT IS ALSO REQUIRED FROM PRMD FOR THE PUMP AND ALARM SYSTEM. AN ELECTRICAL FINAL IS REQUIRED PRIOR TO THE DESIGNER FINALING THE SEPTIC SYSTEM.

14. FOR A MOUND, AT GRADE OR PRESSURE DISTRIBUTION SYSTEM, A HYDRALIC TEST - WATER TIGHTNESS AND SQUIRT TEST - IS TO BE PERFORMED ON THE SEPTIC AND SUMP TANK AS WELL AS THE DISTRIBUTION SYSTEM PRIOR TO COVERING THE SYSTEM. THE SEPTIC TANK AND SUMP IS TO BE FILLED INSIDE THE RISERS TO GROUND LEVEL. NO MORE THEN A 1 INCH DROP PER HOUR IS ALLOWED. HOLES IN THE LATERALS ARE TO BE POINTED UPWARD FOR THE HYDRAULIC TEST AND THEN TURNED AND GLUED WITH HOLES FACING DOWNWARD PRIOR TO COVERING SYSTEM OR LEFT TURNED UPWARD AND COVERED WITH AN APPROVED SLEEVE. THE SQUIRT SHOULD BE A MINIMUM OF 24" HIGH.

15. FOR A PRESSURIZED SYSTEM, VALVES AT THE MIDPOINT OF THE DISTRIBUTION LATERALS ARE TO BE WIRED IN PLACE TO PREVENT ACCIDENTAL TURNING AFTER THE HYDRAULIC TEST.

16. THE LATERAL PIPES AND THE TRENCH BOTTOM IS TO BE LEVEL AND ON CONTOUR FOR ALL SEPTIC SYSTEMS.

17. THE DISTRIBUTION SYSTEM IS TO REMAIN UNCOVERD FOR INSPECTION.

18. MOUND, AT-GRADE AND PRESSURE DISTRIBUTIONS SYSTEMS REQUIRE THREE INSPECTIONS

19. A FINAL APPROVAL LETTER FROM THE DESIGNER WILL BE SENT TO PRMD AFTER ALL REQUIRED INSPECTIONS ARE MADE.

PERMIT AND RESOURCE MANAGEMENT DEPARTMENT ADMINISTRATIVE MANUAL

NUMBER 9-2-8

B. CONTROL FLOATS SHALL BE ATTACHED TO PVC POLE BY PLASTIC TIE STRAPS. STAINLESS STEEL STRAPS WILL NOT BE ACCEPTED.
C. THE PUMP SHALL BE MOUNTED ON A 4 INCH CONCRETE BLOCK AT THE BOTTOM OF THE SUMP CHAMBER.

IV. REQUIRED ELECTRICAL FEATURES
A. ALL MATERIALS, CONNECTIONS, AND SPECIFICATIONS SHALL MEET THE CALIFORNIA ELECTRICAL CODE.
1. IN ALL CASES IN WHICH A SUMP WITH A PUMP IS USED FOR A SEWAGE DISPOSAL SYSTEM, THE CONTRACTOR / OWNER SHALL OBTAIN AN ELECTRICAL PERMIT FROM PRMD OR CITY BUILDING DEPARTMENT HAVING JURISDICTION.
2. THE BUILDING OFFICIAL SHALL BE RESPONSIBLE FOR INSPECTION AND APPROVAL OF ALL ELECTRICAL CODE.
3. DISCONECTING MEANS SHALL BE LOCATED IN SIGHT FROM THE PUMP LOCATION PER THE COUNTY ADOPTED ELECTRICAL CODE.
B. THE ALARM BOX SHALL BE EQUIPPED WITH
1. A LOUD (87 DECIBELS AT 10 FOOT MINIMUM HORIZONTAL DISTANCE FROM THE ALARM LOCATION) AUDIO ALARM AND NECESSARY FLOAT TO INDICATE A "HIGH WATER" CONDITION.
2. A MINIMUM SIZED 7/8 INCH DIAMETER RED LIGHT SHALL BE MOUNTED ON THE FACE OF THE PANEL WHICH SHALL GLOW AS LONG AS THE "HIGH WATER" CONDITION EXISTS.
3. A MOMENTARY "ALARM TEST/ALARM SERVICE" SWITCH TO TEST THE ALARM LIGHT AND HORN AND TO SILENCE THE AUDIO ALARM HORN DURING A "HIGH WATER" CONDITION.
C. A "WIDE ANGLE" FLOAT SWITCH SHALL BE USED TO ACTIVATE THE PUMP. NARROW ANGLE FLOAT SWITCHES ARE UNACCEPTABLE. THE ALARM/CONTROL BOX SHALL BE EQUIPED WITH A MOTOR CONTRACTOR FOR THE PUMP AND A MOMENTARY CONTACT "PUMP TEST" SWITCH TO MANUALLY RUN THE PUMP BYPASSING THE CONTROL PANEL AUTOMATIC MODE.
D. ELECTRICAL SERVICE TO THE ALARM/CONTROL PANEL SHALL BE EQUIPPED WITH A BREAKER OR FUSE AT THE POWER SOURCE WHICH IS LARGER
THEN THE CIRCUIT BREAKER FOR THE PUMP IN THE ALARM/CONTROL PANEL.
1. THE ALARM/CONTROL PANEL SHALL BE EQUIPPED INTERNALLY WITH SEPARATE CIRCUIT PROTECTION FOR THE CONTROL AND PUMP CIRCUITRY.
2. PUMP PROTECTION SHALL BE PROVIDED BY A THERMAL MAGNETIC CIRCUIT BREAKER FOR OVERLOAD PROTECTION.
A. IF THE PUMP IS SINGLE-PHASE, THE MOTOR WINDINGS SHALL HAVE INTERNAL THERMAL OVERLOAD PROTECTION.
B. IF THREE PHASE, THE CIRCUIT PROTECTIONS IN THE ALARM/CONTROL BOX SHALL BE EQUIPPED WITH AN ADJUSTABLE THERMAL OVERLAOD PROTECTION.
3. NO ELECTRICAL JUNCTION BOX SHALL BE PLACED BELOW GROUND LEVEL OR WITHIN THE SUMP CHAMBER.
4. THE PUMP POWER LEAD AND THE FLOAT SWITCH CONTROL WIRES SHALL NOT BE RUN IN A COMMON CONDUIT.
A. ALL WIRES GOING INTO THE SUMP SHALL BE INDIVIDUALLY SEALED WITH PVC GAS TIGHT FITTINGS IN EITHER THE JUNCTION BOX OR ALARM/CONTROL PANEL AS APPROPRIATE.
B. METALLIC GAS TIGHT FITTINGS ARE NOT ALLOWED.
DEPENDING ON THE DESIGN SITUATION.
E. A NON-RESETTABLE DOSE COUNTER SHALL BE INSTALLED IN CONTROL BOXES UTILIZED FOR MOUND, SHALLOW TRENCH PRESSURE DISTRIBUTION, AND OTHER NON-STANDARD SYSTEMS. NOTE: CONTROL BOXES THAT MUST BE OPENED TO VIEW THE DOSE COUNTER SHALL BE EQUIPPED WITH A CLEAR PLASTIC OR PYREX SAFETY SHIELD INSIDE THE CONTROL BOX. THE CONTROL BOX SHALL HAVE A LABEL PLACED ON IT STATING "CAUTION ELECTRICAL HAZARD".
F. ALARM/CONTROL PANEL ENCLOSURES SHALL BE NEMA TYPE 4. IF MOUNTED A GREATER DISTANCE THEN 25 FEET FROM THE HOUSE, A REMOTE ALARM WITH AN ADDITIONAL LIGHT AND HORN SHALL BE PROVIDED.
1. ENCLOSURE FOR THE REMOTE AND AUDIO/VISUAL ALARM SHALL BE NEMA TYPE 4 IF MOUNTED OUTDOORS.
2. ENCLOSURE FOR THE REMOTE AND AUDIO/VISUAL ALARM SHALL BE NEMA TYPE 1 IF MOUNTED INDOORS.
3. EMERGENCY DISCONNECT FOR THE ALARM/CONTROL PANEL IS PROVIDED FOR BY THE INTERNAL FUSED DISCONNECT AND PUMP CIRCUIT BREAKER.
V. SEWAGE PIPING
A. WHERE ENTERING THE SUMP, A MINIMUM 3 INCH ABS OR PVC SCHEDULE 40 STUB, SHALL BE CAST IN PLACE OR SEALED WITH THOROPLUG OR OTHER WATER PROOF MATERIAL.
B. MINIMUM 1 1/4 INCH PVC SCHEDULE 40 FROM PUMP TO LEACHFIELD IS REQUIRED WITH
1. A 1/16 - 1/8 INCH DIAMETER ANTI-SIPHON AND AIR VENT HOLE.
2. PVC CHECK VALVE
3. PVC GATE OR BALL VALVE AND UNION(S)
4. BRASS TYPE FITTINGS, VALVES, AND PIPING ARE PROHIBITED IN SUMP CHAMBERS.
C. HIGH POINTS IN THE TRANSMISSION LINE AFTER THE SUMP MAY REQUIRE AN "AIR RELIEF VALVE" DEPENDING ON THE DESIGN SITUATION.

INSPECTION SCHEDULES & NOTES:

THE COUNTY SANITARIAN SHALL INSPECT THE SITE AND WEATHER CONDITIONS PRIOR TO CONSTRUCTION OF THE SYSTEM. HE/SHE MUST VERIFY DRY AND ACCEPTABLE SOIL AND WEATHER CONDITIONS FOR CONSTRUCTION AND DECIDE IF CONDITIONS ARE SUITABLE TO BEGIN CONSTRUCTION.

THE COUNTY SANITARIAN SHALL VERIFY (WITH THE CONTRACTOR) THE PROPER STAKING OF THE SYSTEM PRIOR TO ANY CONSTRUCTION. THE SYSTEM DETAILS, CONFIGURATION, LOCATION, CONTOUR, PERCOLATION AREA, EXPANSION AREA, ETC. SHALL BE VERIFIED.

THE CONTRACTOR SHALL NOTIFY PRMD A MINIMUM OF 24 HOURS IN ADVANCE OF WHEN CONSTRUCTION IS TO TAKE PLACE AND MUST GAIN CERTIFICATION FROM THE ENGINEER OR COUNTY SANITARIAN THAT THE SOIL CONDITIONS ARE ACCEPTABLE FOR CONSTRUCTION PURPOSES AND THAT THE STAKING OF THE SYSTEM HAS BEEN ACCOMPLISHED AND CERTIFIED.

ALL MEETINGS AND INSPECTIONS SHALL BE SCHEDULED WITH THE COUNTY & ENGINEER A MINIMUM OF 48 HOURS IN ADVANCE. THESE SHALL INCLUDE AS A MINIMUM:

(A) PRE-CONSTRUCTION CONFERENCE.

(B) INTERIM INSPECTION, PERFORMED PRIOR TO COVERING ANY ELEMENTS OF THE SYSTEM. THE CONTRACTOR IS RESPONSIBLE FOR NOTIFYING THE PRMD SANITARIAN A MINIMUM OF 24 HOURS IN ADVANCE, AND NO LATER THAN 9:00 AM OF THE PRIOR WORKING DAY.

(C) FINAL INSPECTION OF COMPLETED SYSTEM AND ALL RELATED ITEMS PER THE CONSTRUCTION DOCUMENTS.

PRE-CONSTRUCTION CONFERENCE:

THE FOLLOWING ITEMS SHALL BE REVIEWED. CONSTRUCTION MAY PROCEED IF THE PRMD SANITARIAN AGREES THAT ALL ELEMENTS APPEAR TO CONFORM TO THE FOLLOWING REQUIREMENTS:

SOIL MOISTURE AT THE APPROPRIATE DEPTHS ARE NOT SO HIGH AS TO HAVE THE SOIL SMEAR OR COMPACT DUE TO CONSTRUCTION ACTIVITIES.

IMMINENT WEATHER CONDITIONS APPEAR THAT THEY WILL NOT CREATE UNSUITABLE SOIL MOISTURE CONDITIONS DURING THE COURSE OF CONSTRUCTION.

LAYOUT AND STAKING OF THE LEACHLINES SUBSTANTIALLY CONFORM TO THE APPROVED CONSTRUCTION DOCUMENTS.

INTERIM INSPECTION:

THE FOLLOWING ELEMENTS, WHEN REQUIRED, SHALL BE VERIFIED BY VISUAL INSPECTION AND OPERATION OF THE SYSTEM. WHEN ALL REQUIRED ITEMS ARE COMPLETED AND APPROVED, THE DISPOSAL FIELD, TRENCHES AND TANKS MAY BE COVERED OR BACKFILLED.

LINE AND GRADE OF ALL EXCAVATIONS AND FILLS AS APPLICABLE.

ALL THE REMAINING ELEMENTS REQUIRED TO COMPLETE THE SYSTEM SHALL BE ON SITE AT THE TIME FOR VERIFICATION AND APPROVAL FOR CONFORMANCE WITH THE PLANS AND SPECIFICATIONS.

FINAL INSPECTION:

SONOMA CO. PRMD WILL PERFORM A FINAL INSPECTION OF THE SYSTEM. THE PRMD WILL NOT SIGN-OFF THE PERMIT OR JOB CARD UNTIL THE HOUSE OR STRUCTURE IS READY FOR OCCUPANCY (IF APPLICABLE).

ENGINEER'S NOTE: THE CONTRACTOR SHALL BE RESPONSIBLE FOR ALL NOTIFICATIONS.

SUMP PUMP AND TANK

1. CAPACITY A. MINIMUM 300 GALLON STORAGE CAPACITY BETWEEN THE HIGH WATER ALARM AND THE INLET.

2. CONCRETE TANKS SHALL BE A MONLITHIC CASTING OR JOINTS SEALED SEALED WITH THOROPLUG OR OTHER APPROVED SEALANTS. CONCRETE SUMPS SHALL BE PRTOECTED WITH "XYPEX", "THOROSEAL" OR "ULTRA-BLOC" ON THE INSIDE. ASPHALT

EMULSION OR TAR SHALL NOT BE USED AS JOINT SEALANTS.

3. ALL SUMPS SHALL HAVE A RISER THAT EXTENDS TO AT LEAST SIX INCHES ABOVE FINISHED GRADE. RISERS SHALL BE SEALED WATERTIGHT TO THE SUMP CHAMBER WITH "RAMNEK" OR OTHER APPROVED MATERIAL. WOOD RISERS ARE NOT ALLOWED.

4. ALL PIPES AND/OR ELECTRICAL CONDUITS ENTERING THE SUMP SHALL BE GAS AND WATER TIGHT. GROUT OR ASPHALT EMULSION IS NOT AN ACCEPTABLE SEALANT.

5. REQUIRED PUMP FEATURES:
A. FLOAT CONTROLS FOR THE PUMP AND AUDIO/VISUAL ALARM SHALL BE MOUNTED TO A SCHEDULE 40 PVC POLE MOUNTED INSIDE THE PUMP CHAMBER THAT CAN BE REMOVED FOR MAINTENANCE. TIE STRAPS. PLASTIC
B. CONTROL FLOATS SHALL BE ATTACHED TO PVC POLE WITH
C. THE PUMP SHALL BE MOUNTED ON A 4 INCH CONCRETE BLOCK ON THE SUMP TANK FLOOR.

6. REQUIRED ELECTRICAL FEATURES:
A. A DISCONNECTING MEANS SHALL BE LOCATED IN SIGHT FROM THE PUMP LOCATION.
B. THE ALARM/CONTROL BOX SHALL BE EQUIPPED WITH THE FOLLOWING:
B1. A LOUD AUDIO ALARM AND NECESSARY FLOAT TO INDICATE A HIGH WATER CONDITION.
B2. A MINIMUM SIZED 7/8 INCH DIAMETER RED LIGHT SHALL BE MOUNTED ON THE FACE OF THE PANEL, WHICH SHALL GLOW AS LONG AS THE HIGH WATER CONDITION EXISTS.
B3. A MOMENTARY "ALARM TEST/ ALARM SILENCE" SWITCH TO TEST THE ALARM LIGHT AND HORN AND TO SILENCE THE AUDIO ALARM HORN DURING A HIGH WATER CONDITION.
C. A "WIDE ANGLE" MECURY/MECHANICAL FLOAT SWITCH SHALL BE USED TO ACTIVATE THE PUMP. NARROW ANGLE FLOAT SWITCHES ARE NOT ACCEPTABLE. THE ALARM/CONTROL BOX SHALL BE EQUIPPED WITH A MOTOR CONTACTOR FOR THE PUMP AND A MOMENTARY CONTACT "PUMP TEST" SWITCH TO MANUALLY RUN THE PUMP, BYPASSING THE CONTROL PANEL AUTOMATIC MODE.
D. ELECTRICAL SERVICE TO THE ALARM/CONTROL PANEL SHALL BE EQUIPPED WITH A BREAKER OR FUSE AT THE POWER SOURCE WHICH IS LARGER THAN THE CIRUIT BREAKER FOR THE PUMP IN THE ALARM/CONTROL PANEL.
D1. THE ALARM/CONTROL PANEL SHALL BE EQUIPPED INTERNALLY WITH SEPARATE CIRCUIT PROTECTION FOR THE CONTROL AND PUMP CIRCUITRY.
D2. PUMP PROTECTION SHALL BE PROVIDED BY A THERMAL MAGNETIC CIRCUIT BREAKER FOR OVERLOAD AND SHORT CIRCUIT PROTECTION.
D2A. IF THE PUMP IS SINGLE PHASE, THE MOTOR WINDINGS SHALL HAVE INTERNAL THERMAL OVERLOAD PROTECTION.
D2B. IF THREE PHASE, THE CONTACTOR IN THE ALRM/CONTROL BOX SHALL BE EQUIPPED WITH AN ADJUSTABLE THERMAL OVERLOAD PROTECTION.
D3. NO ELECTRICAL JUNCTION BOX SHALL BE PLACED BELOW GROUND LEVEL OR WITHIN THE SUMP.
D4. THE PUMP POWER LEAD AND THE FLOAT SWITCH CONTROL WIRES SHALL NOT BE RUN IN A COMMMON CONDUIT.
D4A. ALL WIRES GOING INTO THE SUMP SHALL BE INDIVIDUALLY SEALED WITH PVC GAS TIGHT FITTINGS IN EITHER THE JUNCTION BOX OR ALARM/CONTROL PANEL AS APPROPRIATE.
D4B. METALLIC GAS TIGHT FITTINGS ARE NOT ALLOWED.
E. A NON-RESETTABLE DOSE COUNTER SHALL BE INSTALLED N CONTROL BOXES. CONTROL BOXES THAT MUST BE OPENED TO VIEW THE DOSE COUNTER SHALL BE EQUIPPED WITH A CLEAR PLASTIC OR PYREX SAFETY SHIELD INSIDE THE CONTROL BOX. THE CONTROL BOX SHALL HAVE A LABEL PLACED ON IT STATING "CAUTION-ELECTRICAL HAZARD".
F. ALARM/CONTROL PANEL ENCLOSURE SHALL BE NEMA TYPE 4. IF MOUNTED A GREATER DISTANCE THAN 25 FEET FROM THE HOUSE, A REMOTE ALARM WITH AN ADDITIONAL LIGHT AND HORN SHALL BE PROVIDED.
F1. ENCLOSURE FOR THE REMOTE AND AUDIO/VISUAL ALARM SHALL BE NEMA TYPE 4, IF OUTDOORS.
F2. ENCLOSURE FOR THE REMOTE AND AUDIO/VISUAL ALARM SHALL BE NEMA TYPE 1, IF INDOORS.
F3. EMERGENCY DISCONNECT FOR THE ALARM/CONTROL PANEL IS PROVIDED FOR BY THE INTERNAL FUSED DISCONNECT AND PUMP CIRCUIT BREAKER.

7. PIPING OF SEWAGE EFFLUENT
A. WHERE ENTERING THE SUMP, A MINIMUM OF 3 INCH DIAMETER PVC SHEDULE 40 STUB SHALL BE CAST IN PLACE OR SEALED WITH THOROPLUG OR OTHER WATERPROOF MATERIAL.
B. 2 INCH PVC SCHEDULE 40 PRESSURE LINE FROM PUMP TO LATERALS.
C. BRASS TYPE FITTINGS, VALVES, AND PIPING ARE PROHIBITED IN SUMP TANKS.

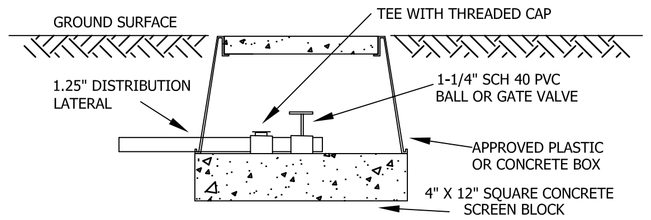

PURGE VALVE DETAIL

NOT TO SCALE

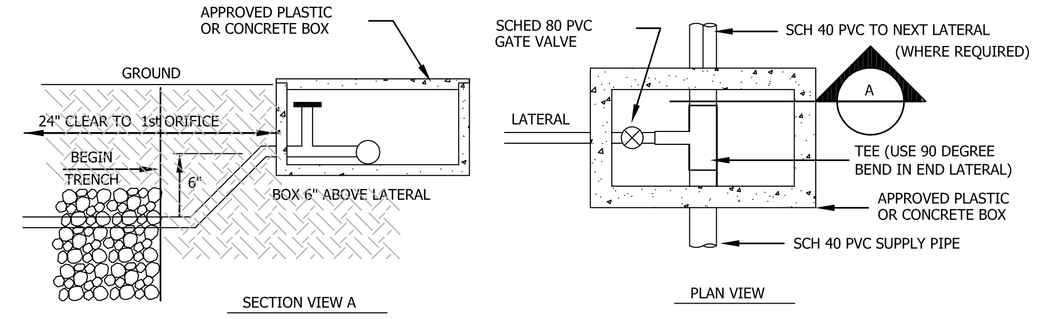

NOTE:
BALANCING VALVES TO BE LOCATED AT THE BEGINNING OF EACH LATERAL. BALANCING VALVE IS USED TO SET ORIFICE DISCHARGE HEIGHT TO 5 FT. BOX SIZE SHALL BE A MINIMUM OF 10 INCHES ACROSS TO ALLOW ROOM FOR MAINTENANCE.

BALANCING VALVE DETAIL

NO SCALE

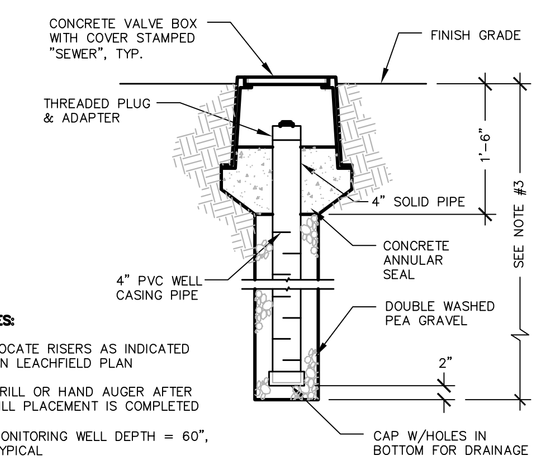

NOTES:

1. LOCATE RISERS AS INDICATED ON LEACHFIELD PLAN
2. DRILL OR HAND AUGER AFTER FILL PLACEMENT IS COMPLETED
3. MONITORING WELL DEPTH = 60", TYPICAL

MONITORING WELL DETAIL

NO SCALE

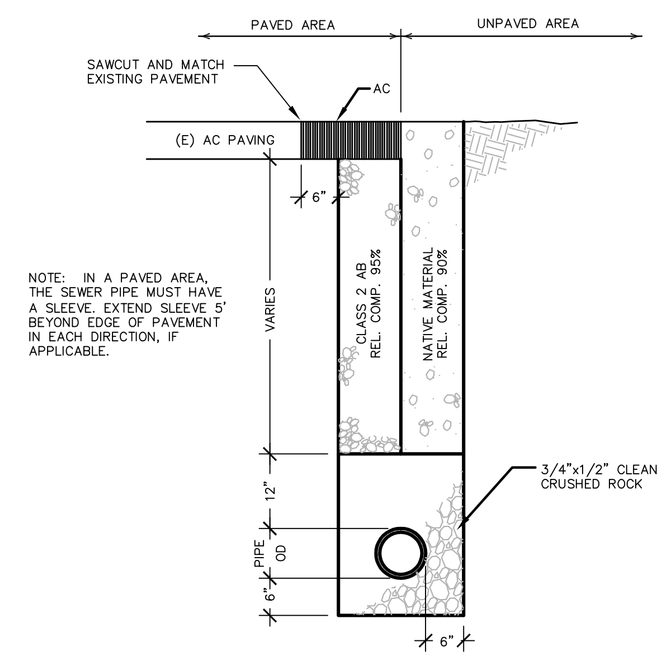

TRENCH DETAIL - SEWER LATERAL

NOT TO SCALE

NO.	DATE	REVISION DESCRIPTION	BY	CHK

ENTERRA Associates, Inc.
CONSULTING CIVIL ENGINEERS, PLANNERS & SURVEYORS
1585 TERRACE WAY, #416, SANTA ROSA, CA 95404
• FAX (707) 544-6361 • PH (707) 544-6351 •

Copyright © 2009 Enterra Associates Inc. This drawing is an instrument of service and is the sole property of Enterra Associates Inc. Any use of this drawing without written consent of Enterra Associates Inc. is prohibited. Drawing scales as indicated are for reference only and are not intended to accurately depict actual or designed conditions. Written dimensions shall govern.

PARCEL MAP MNS05-0044

LOT 2 - NOTES AND DETAILS
7170 BENNETT VALLEY ROAD
SANTA ROSA, CALIFORNIA
APN 055-150-006

NO SCALE

DATE:	7.1.09
DESIGNED BY:	RTS
CHECKED BY:	RTS
JOB NO.:	05.125.00
SHEET NO.:	SS3 OF SS4

REGISTERED PROFESSIONAL ENGINEER RICKARD T. SWINTH No. 60906 Exp. 12/31/10 CIVIL STATE OF CALIFORNIA