SEPTIC TANKS

1. ALL SEPTIC TANKS MUST BE ACCEPTED BY IAPMO AS MEETING STANDARD PS-1.
   A. ALL SEPTIC TANKS SHALL BE WATER TIGHT.
   B. METAL OR WOODEN TANKS ARE PROHIBITED.
   C. ALL SEPTIC TANKS SHALL BE OF TWO COMPARTMENT CONSTRUCTION. THE FIRST SHALL BE TWICE THE CAPACITY OF THE SECOND AND SEPARATED BY A BAFFLE.
2. PLACEMENT
   A. SEPTIC TANKS SHALL BE INSTALLED PER MANUFACTURER'S SPECIFICATION.
   B. THE TANK SHALL BE INSTALLED ON A SOLID LEVEL BED.
   C. SOIL AROUND THE TANK MUST BE COMPACTED; SAND MUST BE JETTED.
3. TANKS MUST HAVE A STRENGTH CAPABLE OF WITHSTANDING ANTICIPATED LOADS.
4. ACCESS RISERS
   A. A RISER SHALL EXTEND FROM EACH MANHOLE COVER TO A HEIGHT OF SIX INCHES ABOVE THE GROUND TO ALLOW ACCESS FOR INSPECTION AND MAINTENANCE OF THE TANK AND OF SUFFICIENT SIZE FOR REMOVAL OF THE MANHOLE COVER.
   B. RISERS SHALL BE WATERTIGHT CONCRETE, PVC OR FIBERGLASS, AND SHALL BE CAPABLE OF WITHSTANDING ANTICIPATED LOADS FROM SOIL BACKFILL.
   C. ALL RISERS SHALL BE FITTED WITH AIRTIGHT DURABLE LIDS THAT HAVE A LOCKING MECHANISM TO PREVENT UNWANTED ENTRY AND PREVENT INSECT/RODENT ACCESS.
5. SEPTIC TANK CONNECTIONS
   A. ALL CONNECTIONS FROM BUILDINGS TO SEPTIC TANKS SHALL BE MADE IN ACCORDANCE WITH THE MOST RECENT EDITION OF THE UNIFORM PLUMBING CODE.
6. EFFLUENT FILTERS SHALL BE EQUIVALENT TO ZABEL A100, OR THE ORENCO 4" BIOTUBE EFFLUENT FILTER. BOTH HAVE 1/8" FILTRATION.

MATERIAL SPECIFICATION

1. THE DISTRIBUTION BED SHALL CONSIST OF 3/4" TO 1 1/2" WASHED PEA GRAVEL FREE OF FINES.
2. CONTINUOUS SOIL COVER SHALL CONSIST OF A MEDIUM, LOAMY TEXTURE SOIL.
3. THE PIPE FROM THE SUMP TO THE DRAIN FIELD SHALL BE SOLID PLASTIC, SCHEDULE 40.
4. ASBESTOS CEMENT (A.C.P.) PIPE SHALL NOT BE ALLOWED UNDER ANY CIRCUMSTANCES.
5. THE CONTRACTOR SHALL OBTAIN CERTIFICATIONS FROM THE SUPPLIER FOR THE MATERIALS, STATING THAT THEY MEET THE SPECIFIED CRITERIA ON THE PLANS. THE CONTRACTOR SHALL PROVIDE SAMPLES OF SAND, GRAVEL AND TOPSOIL (IF NON-NATIVE) PRIOR TO IMPORTING FROM THE SUPPLIER.

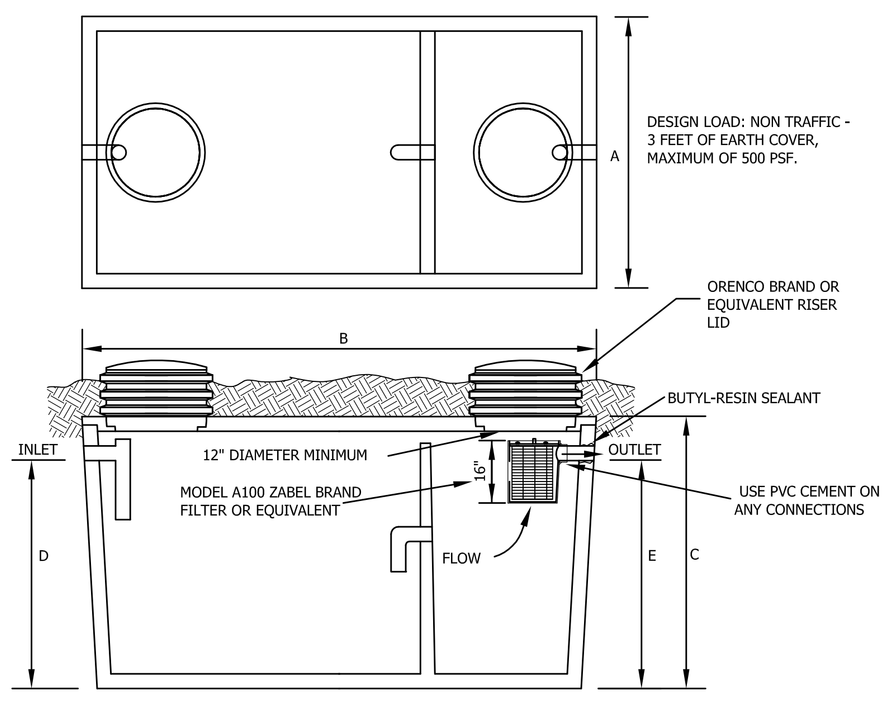

NOTE: THE ABOVE DIAGRAM AND DIMENSION TABLE BELOW ARE FOR JENSEN PRECAST RESIDENTIAL SEPTIC TANKS. EQUIVALENT SEPTIC TANKS MAY ALSO BE USED.

MODEL NUMBER	LIQUID CAPACITY-GALLONS	DIMENSION A	DIMENSION B	DIMENSION C	DIMENSION D	DIMENSION E	MINIMUM EXCAVATION WIDTH	MINIMUM EXCAVATION LENGTH
JS-750	750	4'-0"	8'-1"	5'-8"	4'-10"	4'-7"	5'-0"	9'-1"
JS-1000	1000	5'-1"	8'-2"	5'-8"	4'-10"	4'-7"	6'-1"	9'-2"
JS-1200	1200	5'-9"	8'-6"	5'-8"	4'-10"	4'-7"	6'-9"	9'-6"
JS-1500	1500	5'-7"	10'-8"	5'-8"	4'-10"	4'-7"	6'-7"	11'-8"
JS-2000	2000	4'-11"	15'-11"	5'-8"	4'-10"	4'-7"	5'-11"	16'-11"
JS-2500	2500	5'-9"	16'-10"	5'-8"	4'-10"	4'-7"	6'-9"	17'-10"
JS-3000	3000	5'-9"	16'-10"	6'-5"	5'-7"	5'-4"	6'-9"	17'-10"

SEPTIC TANK DETAIL

NO SCALE

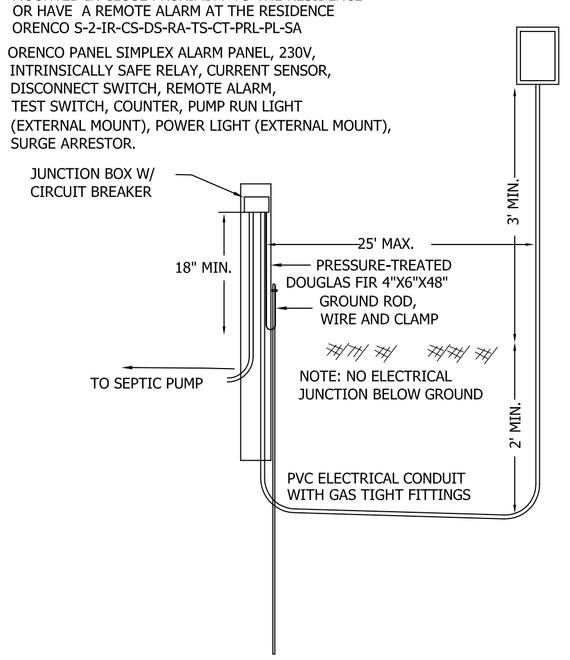

CONTROL BOX AND FLOAT ALARM DETAIL

NOT TO SCALE

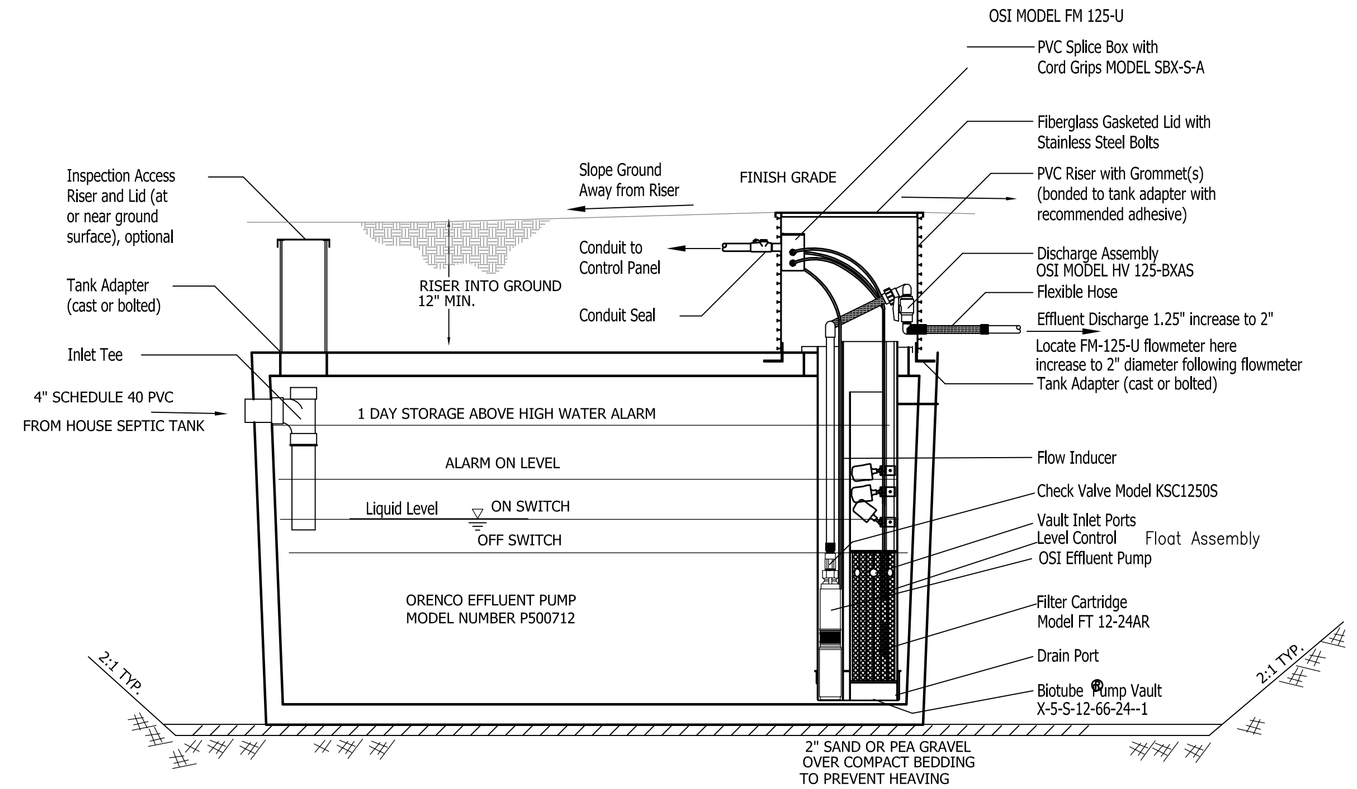

1200 GALLON SUMP TANK DETAIL

NOT TO SCALE

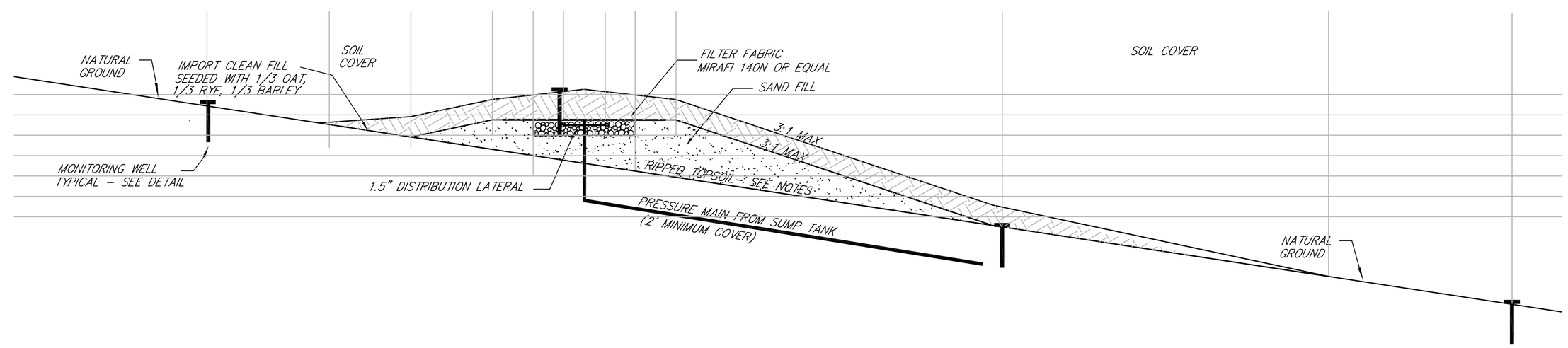

MOUND CROSS SECTION

NOT TO SCALE

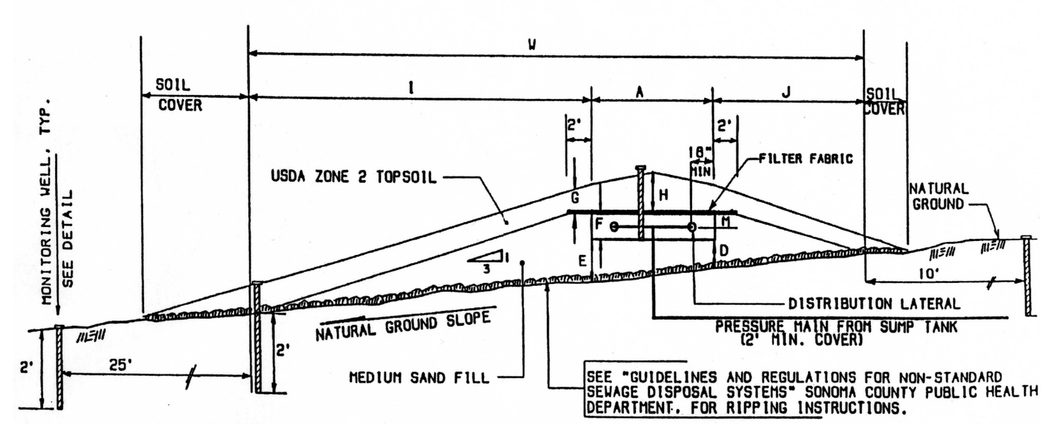

MOUND DETAIL - CROSS SECTION

NOT TO SCALE

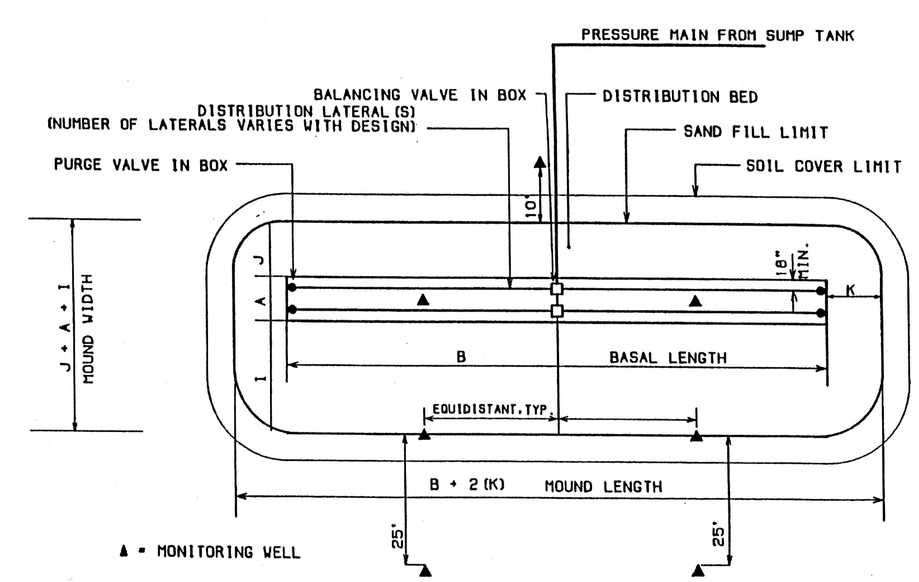

MOUND DETAIL - PLAN VIEW

NOT TO SCALE

APPENDIX C

APPENDIX B

NO.	DATE	REVISION DESCRIPTION	BY	CHK

ENTERRA Associates, Inc.
CONSULTING CIVIL ENGINEERS, PLANNERS & SURVEYORS
888 SECOND STREET, SANTA ROSA, CA 95404
FAX (707) 544-6361 • PH (707) 544-6351

REGISTERED PROFESSIONAL ENGINEER RICKARD T. SWINTH No. 60906 Exp. 12/31/10 CIVIL STATE OF CALIFORNIA

Copyright © 2006 Enterra Associates Inc. This drawing is an instrument of service and is the sole property of Enterra Associates Inc. Any use of this drawing without written consent by Enterra Associates Inc. is prohibited. Dimensions shown are for reference only and are not intended to accurately depict actual or designed conditions. Written dimensions shall govern.

PARCEL MAP MNS05-0044

LOT 2 - NOTES AND DETAILS

7170 BENNETT VALLEY ROAD
SANTA ROSA, CALIFORNIA
APN 055-150-006

NO SCALE

DATE:	7.1.09
DESIGNED BY:	RTS
CHECKED BY:	RTS
JOB NO.:	05.125.00
SHEET NO.:	SS4 OF SS4